CONTACT US

ZHEJIANG RONGDA BIO TECHNOLOGY CO., LTD.

Tel：0576-84080099
Web：www.rongda-bio.com
Alibaba：rongdabio.en.alibaba,com
Add：No. 27, Maofeng Road ,Xinqian Street Huangyan area,Taizhou City , Zhejiang Province

BIOSCIENCE CONSUMABLES

AMGENT 安进特

AMGENT 安进特

ZHEJIANG RONGDA BIO TECHNOLOGY CO., LTD. 2022 English

INTRODUCTION

Zhejiang Rongda Biotechnology Co., Ltd. was established in 2018. Our company's headquarter is located in Huangyan, Taizhou, an economically developed and scenic eastern coastal area in Zhejiang Province. We serve our customers with a science-based and quality-oriented spirit. Our company has a strong professional R&D team. At the same time, we have long-term cooperation with well-known domestic universities and scientific research institutions, and signed the contract of new products development and reagent experiments.

We adhere to the belief of "providing high-quality services for bioscience" and found the AMNGENT brand, focusing on cell culture, molecular biological consumables, biological sample library construction, safety management and the development and production of Class I and Class II diagnostic reagents. We continue to invest in high-end production equipment in the industry and introduce professional process technicians to form a new scientific management team. Our products have passed ISO13485, FDA, CE and other quality system certifications. AMNGENT continues to grow and develop, and our products are exported to companies in more than 80 countries and regions such as the United States and the European Union.

For the early-stage design and development of molds, our company also has a high-quality, professional and persistent team that makes full use of modern CAD/CAM design and the capabilities of a comprehensive CNC machining center to manufacture high-quality medical consumables and various molds.

ISO13485

DIRECTORY

LABORATORY CONSUMABLES SOLUTIONS

Centrifuge Tubes.....02
Microcentrifuge Tubes.....03
Solution Basins.....04
Pipette Tips.....05、06
Filter Pipette Tips.....07、08
Pipette Tips Compatibility Chart.....09
Pipette Tips For Rainin.....10
Pasteur Pipettes.....11
PCR Tubes.....12
PCR Plates.....13
Petri Dishes.....14
Inoculating Loops&Needles.....15
Cell Spreader.....16
PC Conical Flasks.....17
Gloves.....18
Serological Pipettes.....19
Cell Filters.....20
Cell Culture Dishes.....21
Cell Culture Flasks.....22
Cell Culture Plates.....23
Elisa Plates.....24

Biobank Consumables Solutions

General CryoTubes.....26
2D CryoTubes.....27

DIRECTORY

SBS CryoTubes.....28
Carboard Cryo boxes.....29
Hinged lid Cardboard Cryo Boxes.....30
PP Cryo boxes.....31
PC Cryo Boxes.....32
Gradient Cooling Boxes.....33
Frame Freezer Racks.....34
Self Fixation Freezer Racks.....35
Scanning Gun & Scanner.....36
SBS 8-tube Lid Openers.....37
Low-temperature Label Printers & Labels.....38
Sample Library Management Software.....39

IVD SOLUTION CONSUMABLES

Screw Cap Microtubes- Short Cap.....41
Screw Cap Microtubes-- High Cap.....42
Reagent Bottles.....43、44
Media Bottles.....45
Sample tubes.....46
Antigen test Tube.....47
Deep well plates.....48
Hamilton Automatic Pipette tips.....49
Tecan Automatic Pipette Tips.....50
Bacterial Culture Bottle.....51
Saliva Collectors.....52
Disposable Virus Sample Tubes.....53

LABORATORY

CONSUMABLES SOLUTIONS

AMNGENT Provide standing consumables for biomedicine laboratory , including molecular biology, microbial detection, cell culture, and other general consumables, and provide customers with systematic consumable solutions.

Centrifuge Tubes

Features

- Medical grade material : PP Tube & HDPE Cap
- 15ml and 50ml cone bottom design, highly transparent easy for observe,black scale mark and white writing area
- Tube cap double screw design for enhanced sealing, suitable for one-handed operation
- Flat cover design, easy for operators used as a sample information marking area.
- E-beam sterilization, DNase/RNase-free, Endotoxin-free
- Packaging Available:sterile foam rack, sterile bag and other multiple packaging specifications

Specifications

- Temperature tolerance range: -80℃-121℃
- Max RCF: 15ml centrifuge tube: 12000G
  50ml centrifuge tube: 9500G

Item No.	Volume	Bottom shape	Max RCF(g)	Sterile	Non-enzyme	Packaging Specifications
220015	15ml	conical	12000	Yes	Yes	25pcs/bag,20bags/carton
220050	50ml	conical	9500	Yes	Yes	25pcs/bag,20bags/carton
220250	50ml	Self-standing	9500	Yes	Yes	25pcs/bag,20bags/carton
221015	15ml	conical	12000	Yes	Yes	50pcs/rack,10racks/carton
221050	50ml	conical	9500	Yes	Yes	25pcs/rack,20racks/carton

Dimensions=mm

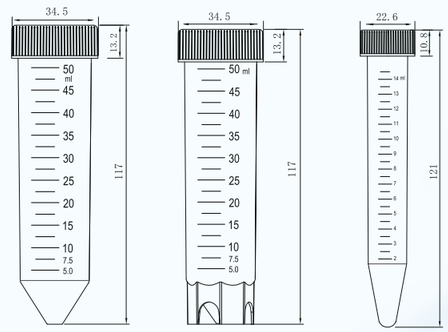

50ml
220050/221050

50ml
220250

15ml
220015/221015

Microcentrifuge Tubes

Features

- Medical grade PP material:
- Highly transparent easy for observe, Clear Graduations and frosted marking area
- Special safelock cap design provides secure lid sealing
- Flat cover design for easy writing and marking
- DNase free, RNase free, Endotoxin free
- Both sterile and non-sterile tubes are available

Specifications

- Temperature tolerance range: -80℃-121℃
- Max RCF: 16000G, suitable for high speed centrifugation

Dimensions=mm

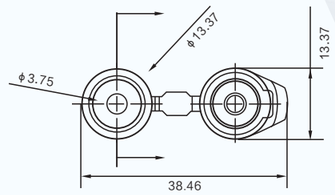

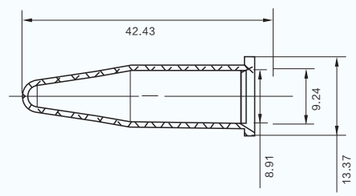

1.5ml

Item No.	Volume	Sterile	Non-enzyme	Packaging Specifications
240005	0.5ml	No	Yes	500pcs/bag,10bags/carton
240015	1.5ml	No	Yes	500pcs/bag,10bags/carton
240020	2.0ml	No	Yes	500pcs/bag,10bags/carton

Solution Basins

Features

- Available in PS white and PVC transparent colors
- PS white solution basins : individually sterile pack;bulk pack for PVC transparent solution basins
- Available in 25ml, 55ml, 100ml multi-capacity options
- EO sterile

Item No.	Volume	Material	Sterile	Non-enzyme	Packing	Packaging Specifications
280025	25ml	PS	Yes	Yes	Individual	100pcs/carton
280050	55ml	PS	Yes	Yes	Individual	100pcs/carton
280100	100ml	PS	Yes	Yes	Individual	100pcs/carton
280051	55ml	PVC	No	No	Bulk	10pcs/bag,600pcs/carton

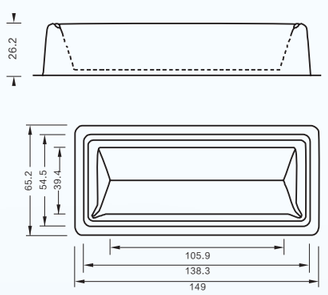

280050/280051

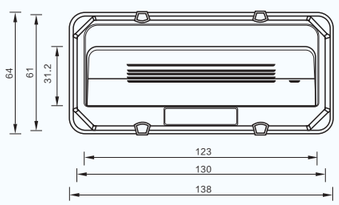

280025

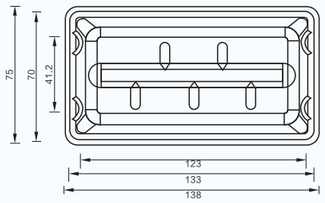

280100

Dimensions=mm

Pipette Tips

Features

- Medical grade polypropylene material
- Available in regular and low adsorption and reload system
- Available in 10 ul, 10 ul longer, 200ul, 300 ul, 500ul,1000 ul and 1250 ul
- Match for standard manual and electronic pipettes
- DNase free, RNase free, Non-pyrogen
- Bacterial endotoxin ＜0.050EU/bottle
- Available in bag pack, rack pack and reload system
- E-Beam Sterile
- Both sterile and non-sterile are available

Specifications

- Can withstand 121 ℃ high temperature and autoclavable sterilization

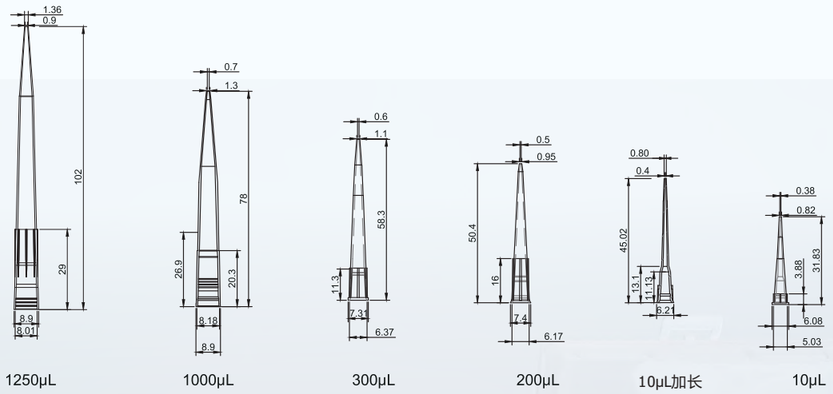

Dimensions=mm

Item No.	Volume	Color	Low adsorption	Sterile	Non-enzyme	Packaging Specifications
430010	10μL	Transparent	No	No	Yes	Bagged，1000tips/bag，10bags/carton
440010	10μL	Transparent	No	Yes	Yes	Racked，96tips/rack , 50racks/box
460010	10μL	Transparent	No	No	Yes	Stacked，96tips/stack，10stacks/inner，10inners/carton
450010	10μL	Transparent	Yes	Yes	Yes	Racked，96tips/rack , 50racks/box
470010	10μL	Transparent	Yes	No	Yes	Stacked，96tips/stack，10stacks/inner，10inners/carton
430011	10μL longer	Transparent	No	No	Yes	Bagged，500tips/bag，20bags/carton
440011	10μL longer	Transparent	No	Yes	Yes	Racked，96tips/rack , 50racks/box
460011	10μL longer	Transparent	No	No	Yes	Stacked，96tips/stack，10stacks/inner，10inners/carton
450011	10μL longer	Transparent	Yes	Yes	Yes	Racked，96tips/rack , 50racks/box
470011	10μL longer	Transparent	Yes	No	Yes	Stacked，96tips/stack，10stacks/inner，10inners/carton
430200	200μL	Transparent yellow	No	No	Yes	Bagged，1000tips/bag，10bags/carton
430201	200μL	Transparent	No	No	Yes	Bagged，1000tips/bag，10bags/carton
440200	200μL	Transparent yellow	No	Yes	Yes	Racked，96tips/rack , 50racks/box
440201	200μL	Transparent	No	Yes	Yes	Racked，96tips/rack , 50racks/box
460200	200μL	Transparent yellow	No	No	Yes	Stacked，96tips/stack，10stacks/inner，10inners/carton
450200	200μL	Transparent yellow	Yes	Yes	Yes	Racked，96tips/rack , 50racks/box
470200	200μL	Transparent yellow	Yes	No	Yes	Stacked，96tips/stack，10stacks/inner，10inners/carton
430301	300μL	Transparent	No	No	Yes	Bagged，1000tips/bag，10bags/carton
440301	300μL	Transparent	No	Yes	Yes	Racked，96tips/rack , 50racks/box
460300	300μL	Transparent	No	No	Yes	Stacked，96tips/stack，10stacks/inner，10inners/carton
470300	300μL	Transparent	Yes	No	Yes	Stacked，96tips/stack，10stacks/inner，10inners/carton
431000	1000μL	Transparent blue	No	No	Yes	Bagged，1000tips/bag，10bags/carton
431001	1000μL	Transparent	No	No	Yes	Bagged，1000tips/bag，10bags/carton
441000	1000μL	Transparent blue	No	Yes	Yes	Racked，96tips/stack , 30racks/box
441001	1000μL	Transparent	No	Yes	Yes	Racked，96tips/stack , 30racks/box
461000	1000μL	Transparent blue	No	No	Yes	Stacked，96tips/stack，8stacks/inner，10inners/carton
451000	1000μL	Transparent blue	Yes	Yes	Yes	Racked，96tips/stack , 30racks/box
471000	1000μL	Transparent blue	Yes	No	Yes	Stacked，96tips/stack，8stacks/inner，10inners/carton
431250	1250μL	Transparent	No	No	Yes	Bagged，500pcs/bag，10bags/carton
441250	1250μL	Transparent	No	Yes	Yes	Racked，96tips/stack , 30racks/box
461250	1250μL	Transparent	No	No	Yes	Stacked，96tips/stack，8stacks/inner，10inners/carton
451250	1250μL	Transparent	Yes	Yes	Yes	Racked，96tips/stack , 30racks/box
471250	1250μL	Transparent	Yes	No	Yes	Stacked，96tips/stack，8stacks/inner，10inners/carton

Filter Pipette Tips

Features

- Medical grade polypropylene material, Filter medical grade polyethylene material
- Available in regular and low adsorption
- Available in 10 ul, 10 ul longer, 20ul, 50ul, 100ul, 200 ul,300ul, 1000 ul and 1250 ul
- DNase free, RNase free, Non-pyrogen
- Bacterial endotoxin ＜0.050EU/bottle
- Available in bag pack, rack pack and reload system
- E-Beam sterile
- Both sterile and non-sterile are available

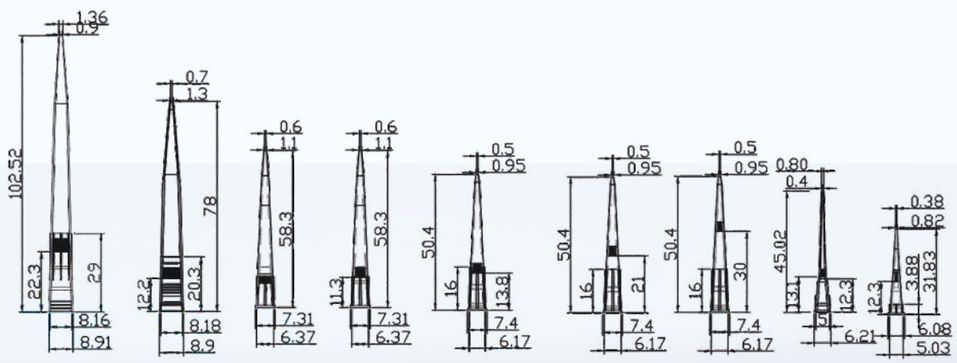

1250μL 1000μL 300μL 200μL 100μL 50μL 20μL 10μL加长 10μL

Dimensions=mm

Item No.	Volume	Color	Low adsorption	Sterile	Non-enzyme	Packaging Specifications
400010	10μL	Transparent	No	No	Yes	Bagged，1000tips/bag，10bags/carton
420010	10μL	Transparent	No	Yes	Yes	Racked，96tips/rack ,10racks/inner，50racks/carton
480010	10μL	Transparent	Yes	Yes	Yes	Racked，96tips/rack ,10racks/inner，50racks/carton
400011	10μL longer	Transparent	No	No	Yes	Bagged，500tips/bag，20bags/carton
420011	10μL longer	Transparent	No	Yes	Yes	Racked，96tips/rack ,10racks/inner，50racks/carton
480011	10μL longer	Transparent	Yes	Yes	Yes	Racked，96tips/rack ,10racks/inner，50racks/carton
400020	20μL	Transparent	No	No	Yes	Bagged，1000tips/bag，10bags/carton
420020	20μL	Transparent	No	Yes	Yes	Racked，96tips/rack ,10racks/inner，50racks/carton
480020	20μL	Transparent	Yes	Yes	Yes	Racked，96tips/rack ,10racks/inner，50racks/carton
400050	50μL	Transparent	No	No	Yes	Bagged，1000tips/bag，10bags/carton
420050	50μL	Transparent	No	Yes	Yes	Racked，96tips/rack ,10racks/inner，50racks/carton
480050	50μL	Transparent	Yes	Yes	Yes	Racked，96tips/rack ,10racks/inner，50racks/carton
400100	100μL	Transparent	No	No	Yes	Bagged，1000tips/bag，10bags/carton
420100	100μL	Transparent	No	Yes	Yes	Racked，96tips/rack ,10racks/inner，50racks/carton
480100	100μL	Transparent	Yes	Yes	Yes	Racked，96tips/rack ,10racks/inner，50racks/carton
400200	200μL	Transparent	No	No	Yes	Bagged，1000tips/bag，10bags/carton
420200	200μL	Transparent	No	Yes	Yes	Racked，96tips/rack ,10racks/inner，50racks/carton
480200	200μL	Transparent	Yes	Yes	Yes	Racked，96tips/rack ,10racks/inner，50racks/carton
400300	300μL	Transparent	No	No	Yes	Bagged，1000tips/bag，10bags/carton
420300	300μL	Transparent	No	Yes	Yes	96tips/rack , 8racks/inner，40racks/carton
480300	300μL	Transparent	Yes	Yes	Yes	96tips/rack，8racks/inner，40racks/carton
401000	1000μL	Transparent	No	No	Yes	Bagged，1000tips/bag，10bags/carton
421000	1000μL	Transparent	No	Yes	Yes	96tips/rack ,6racks/inner，30racks/carton
481000	1000μL	Transparent	Yes	Yes	Yes	96tips/rack ,6racks/inner，30racks/carton
401250	1250μL	Transparent	No	No	Yes	Bagged，500tips/bag，10bags/carton
421250	1250μL	Transparent	No	Yes	Yes	96tips/rack ,6racks/inner，30racks/carton
481250	1250μL	Transparent	Yes	Yes	Yes	96tips/rack ,6racks/inner，30racks/carton

Pipette Tips Compatibility Chart

Compatibility Chart

BRAND	Specification		Universal Tips								Filter Tips									
			440010	440011	440200	0200	440300	441000	1000	441250	420010	420011	420020	420100	200	420200	420300	421000	1000	421250
Thermo	Single Channel	F3 series 1-10ul	√	√							√	√								
		F3 series 2-20ul			√	√							√	√	√	√	√			
		F3 series 5-50ul			√	√								√						
		F3 series 10-100ul			√	√								√						
		F3 series 20-200ul			√	√								√	√	√	√			
		F3 series 100-1000ul						√	√	√								√	√	√
		F2 series 0.5-5ul	√	√																
		F2 series 1-10ul	√	√							√	√								
	Multi Channel	F2 series multichannel 1-10ul	√	√							√	√								
Sartorius	Single Channel	proline series 0.1-2.5ul																		
		proline series 0.5-10ul	√	√							√	√								
		proline series 2-20ul			√	√							√	√						
		proline series 10-100ul			√	√								√						
		proline series 20-200ul			√	√	√							√	√	√	√			
		proline series 100-1000ul						√	√	√								√	√	√
	Multi Channel	0.5-10ul	√	√							√	√								
Bran	Single Channel	0.1-2.5ul	√	√							√	√								
		1-10ul	√	√							√	√								
		2-20ul			√	√							√	√						
		10-100ul			√	√														
		20-200ul			√	√	√							√	√	√	√			
		100-1000ul						√	√	√								√	√	√

Compatibility Chart

BRAND	Specification		Universal Tips								Filter Tips									
			440010	440011	P020	440200	440300	441000	1000	441250	420010	420011	420020	420100	420200	430300	300	421000	1000	42250
Gilson	Single Channel	PN 2-20ul			√	√							√	√						
		PN 10-100ul			√	√								√						
		PN 20-200ul			√	√									√	√	√			
		PN 100-1000ul						√	√	√								√	√	√
Eppendorf	Single Channel	0.1-2.5ul	√	√							√	√								
		1-10ul	√	√							√	√								
		2-20ul			√	√							√	√						
		10-100ul			√	√								√						
		20-200ul			√	√	√								√	√	√			
		100-1000ul						√	√	√								√	√	√
	Multi Channel	0.5-10ul	√	√							√	√								
		5-100ul			√	√								√						
		50-100ul			√	√								√						
		20-300ul			√	√	√								√	√	√			
		30-300ul			√	√	√													
		50-1200						√	√	√										
Dragonlab	Single Channel	0.1-2.5ul	√	√							√	√								
		1-10ul	√	√							√	√								
		2-20ul			√	√							√	√						
		10-100ul			√	√								√						
		20-200ul			√	√	√								√	√	√			
		100-1000ul						√	√	√								√	√	√

Pipette Tips For Rainin

Features

- Medical grade polypropylene material
- Fits Rainin LTS pipettes
- Available in 20ul, 200ul, 1000ul
- Available in regulare non-filter and filter tips ,bag pack and rack pack for options DNase free, RNase free, Non-pyrogen
- Customizable low adsorption
- E-Beam Sterile
- Both sterile and non-sterile are available

Item No.	Filter	Volume	Color	Sterile	Non-enzyme	Packaging Specifications
R430020	Without	20μL	Transparent	No	Yes	bagged，500tips/bag，20bags/carton
R460020	Without	20μL	Transparent	No	Yes	stacked，96tips/stack，10stacks/rack，10racks/carton
R440020	Without	20μL	Transparent	Yes	Yes	racked，96tips/rack，10racks/inner，5inners/carton
R400020	With	20μL	Transparent	No	Yes	bagged，500tips/bag，20bags/carton
R420020	With	20μL	Transparent	Yes	Yes	racked，96tips/rack，10racks/inner，5inners/carton
R430200	Without	200μL	Transparent	No	Yes	bagged，1000tips/bag，10bags/carton
R460200	Without	200μL	Transparent	No	Yes	stacked，96tips/stack，10stacks/rack，10racks/carton
R440200	Without	200μL	Transparent	Yes	Yes	racked，96tips/rack，10racks/inner，5inners/carton
R400200	With	200μL	Transparent	No	Yes	bagged，1000tips/bag，10bags/carton
R420200	With	200μL	Transparent	Yes	Yes	racked，96tips/rack，10racks/inner，5inners/carton
R431000	Without	1000μL	Transparent	No	Yes	bagged，1000tips/bag，5bags/carton
R461000	Without	1000μL	Transparent	No	Yes	stacked，96tips/stack，8stacks/rack，10racks/carton
R441000	Without	1000μL	Transparent	Yes	Yes	racked，96tips/rack，10racks/inner，5inners/carton
R401000	With	1000μL	Transparent	No	Yes	bagged，1000tips/bag，5bags/carton
R421000	With	1000μL	Transparent	Yes	Yes	racked，96tips/rack，10racks/inner，5inners/carton

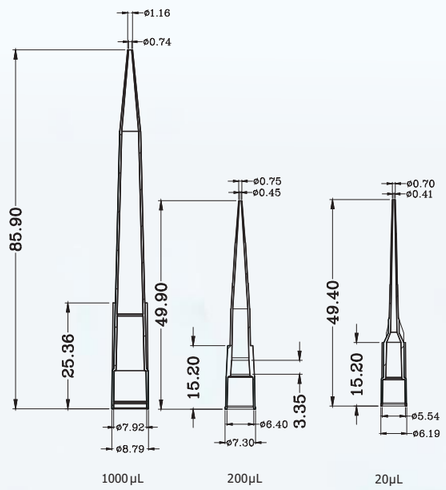

Dimensions=mm

Pasteur Pipettes

Features

- High quality PE material, high toughness, high transparency, good repeatability
- Tube body and bulb thickened design, convenient pipetting and cell blowing
- Slim and soft, easy to transfer liquids quickly, the perfect replacement for glue tip droppers
- Electron beam sterilization
- Available in sterile individually pack and plastic packaging and non-sterile bulk

Item No.	Volume	Length	Sterile	Non-enzyme	Packing	Packaging Specifications
330001	1ml	162mm	No	No	Bulk	500pcs/rack，2000pcs/carton
330011	1ml	162mm	Yes	Yes	Individual	500pcs/rack，2000pcs/carton
330301	3ml	162mm	No	No	Bulk	500pcs/rack，2000pcs/carton
330311	3ml	162mm	Yes	Yes	Individual	500pcs/rack，2000pcs/carton

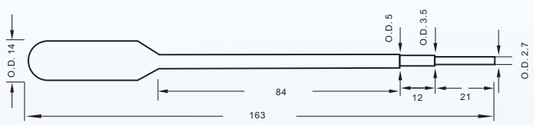

330011

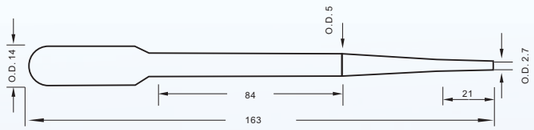

330011

Dimensions=mm

PCR Tubes

Features

- Medical grade polypropylene material
- Ultra-thin tube wall, extremely fast temperature conduction
- Flat lid design, suitable for real-time quantitative PCR experiments
- Special sealing design, effectively avoid the problem of explosion cover
- DNase free, RNase free, Endotoxin free

Specification

- Working temperature: -20° C~100° C, can be matched with conventional brand PCR instruments and can withstand fully supported rotors
- RCF: 6000G

Item No.	Volume	Color	Type	Cap	Non-enzyme	Packaging Specifications
310008	0.1ml,8-strip	Transparent	AXYGEN	Flat	Yes	125pcs/rack，10racks/carton
310108	0.1ml,8-strip	white	AXYGEN	Flat	Yes	125pcs/rack，10racks/carton
311008	0.1ml,8-strip	Transparent	Roche	Flat	Yes	125pcs/rack，10racks/carton
311108	0.1ml,8-strip	white	Roche	Flat	Yes	125pcs/rack，10racks/carton
320002	0.2ml,single	Transparent	General	Flat	Yes	1000pcs/rack，10racks/carton
320108	0.2ml,8-strip	Transparent	AXYGEN	Flat	Yes	125pcs/rack，10racks/carton
320128	0.2ml,8-strip	Transparent	Roche	Flat	Yes	125pcs/rack，10racks/carton
320158	0.2ml,8-strip	Transparent	General	Convex	Yes	125pcs/rack，10racks/carton

Dimensions=mm

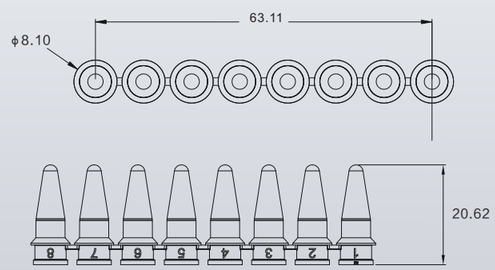

320108

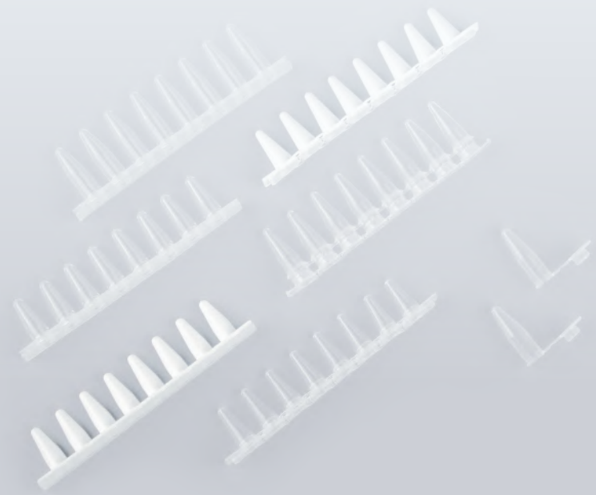

PCR Plates

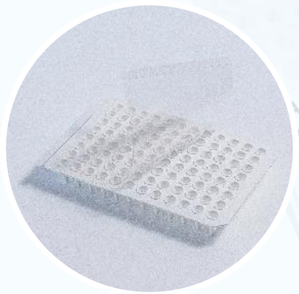

Features

- 1.Medical grade polypropylene material
- 2.Ultra-thin tube wall, extremely fast temperature conduction
- 3.Suitable for real-time fluorescence quantitative experiments
- 4.Available in non-skirt, half skirt and full skirt
- 5.Elevated edge of the hole can better prevent cross contamin ation,and the plate design better for for self-adhesive film
- 6.DNase free, RNase free, Endotoxin free
- 7.Sealing film is made of medical grade polypropylene
- 8.No autofluorescence to ensure experimental accuracy
- 9.Pressure-sensitive film to improve experimental convenience and optical data accuracy

Item No.	Volume	Color	Skirt	Type	Non-enzyme	Packaging Specifications
310196	0.1ml	Transparent	Non-skirt	General	Yes	10pcs/bag，50pcs/carton
310096	0.1ml	Transparent	Half-skirt	Roche	Yes	10pcs/bag，50pcs/carton
313196	0.1ml	White	Non-skirt	General	Yes	10pcs/bag，50pcs/carton
313096	0.1ml	White	Half-skirt	Roche	Yes	10pcs/bag，50pcs/carton
310396	0.1ml	Transparent	Half-skirt	ABI	Yes	10pcs/bag，50pcs/carton
310596	0.1ml	Transparent	Full-skirt	Workstation	Yes	10pcs/bag，50pcs/carton
313596	0.1ml	White	Full-skirt	Workstation	Yes	10pcs/bag，50pcs/carton
320196	0.2ml	Transparent	Non-skirt	General	Yes	10pcs/bag，50pcs/carton
320096	0.2ml	Transparent	Half-skirt	Roche	Yes	10pcs/bag，50pcs/carton
323196	0.2ml	White	Non-skirt	General	Yes	10pcs/bag，50pcs/carton
323096	0.2ml	White	Half-skirt	Roche	Yes	10pcs/bag，50pcs/carton
320396	0.2ml	Transparent	Half-skirt	ABI	Yes	10pcs/bag，50pcs/carton
326000	——	Transparent	——	——	——	100pcs/carton

Dimensions=mm

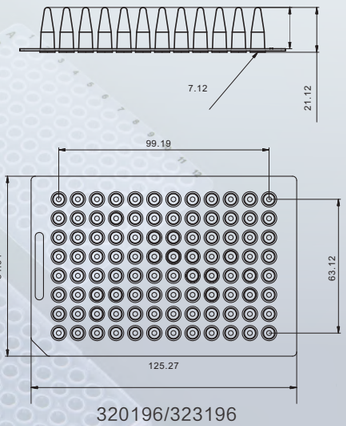

320196/323196

Petri Dishes

Features

- High Clarity polystyrene material
- Three sizes of 60mm, 100mm and 150mm are available
- Breathable design for easy gas exchange
- Stackable for easy storage and handling
- Sterile by E-beam

Item No.	Product Size	Stacked Design	Sterile	Packaging Specifications
401560	60mm	Yes	Yes	10pcs/bag,50bags/carton
401590	90mm	Yes	Yes	10pcs/bag,50bags/carton
401515	150mm	Yes	Yes	10pcs/bag,20bags/carton

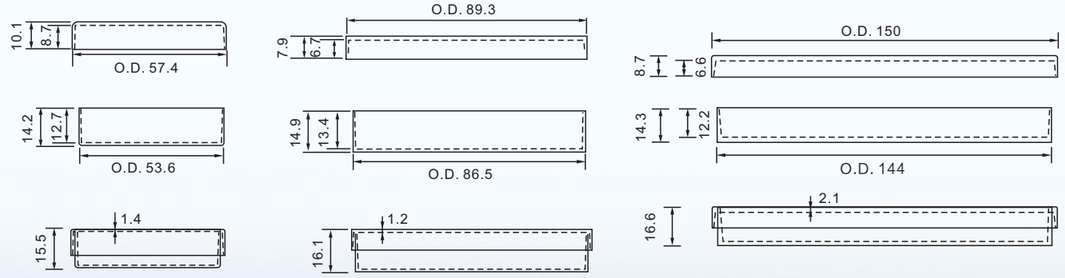

401560 401590 401515

Dimensions=mm

Inoculating Loops&Needles

Features

- Medical grade polystyrene material
- High toughness, easy to line and point planting
- Available in 1ul and 10ul. The ring mouth is strictly measured to improve the accuracy of the inoculation volume.
- The other end of the inoculation loop can be used as an inoculation needle
- E-Beam sterilization
- Ziplock bag packaging with fancyl instruction card inside to protect product from damage during shipping

Item No.	Volume	Color	Sterile	Non-enzyme	Packaging Specifications
550001	1μL	Blue	Yes	Yes	25pcs/bag,40bags/carton
550002	10μL	orange	Yes	Yes	25pcs/bag,40bags/carton

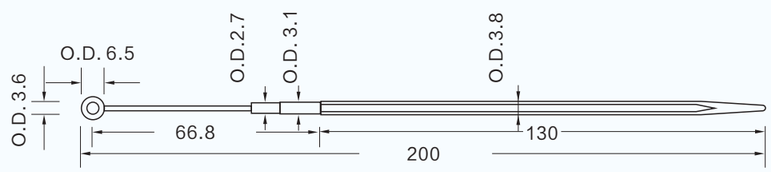

550002

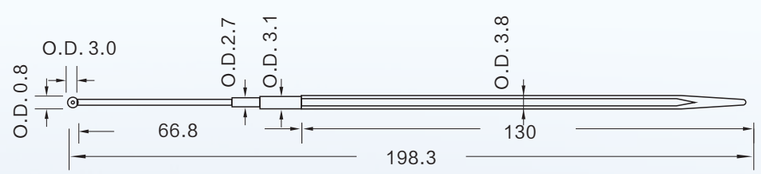

550001

Dimensions=mm

Cell Spreader

Features

- Medical grade polystyrene material
- Smooth surface, tail up design reduces damage to AGAR surface
- The L-shaped design is easy to use
- E-beam
- Provide individually paper-plastic bag packaging or 10 pieces/zipper bag packaging, with fancy cards in the ziplock bag to protect the safety

Item No.	Color	Sterile	Non-enzyme	Packaging	Packaging Specifications
560001	Orange	Yes	Yes	Individual	500pcs/carton
560010	Orange	Yes	Yes	Bulk	10pcs/bag,50bags/carton

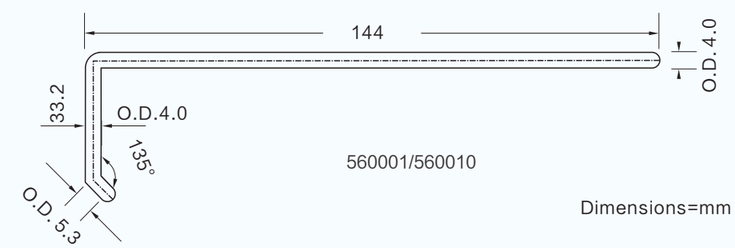

560001/560010

Dimensions=mm

PC Conical Flasks

Features

- Medical grade polycarbonate material
- Various specifications and capacities are available
- Cap options: sealing cover and 0.2um breathable cover according to the experimental requirements
- Temperature tolerance range: −80℃−121℃
- E−beam sterilization
- DNase free, RNase free, Endotoxin free

Dimensions=mm

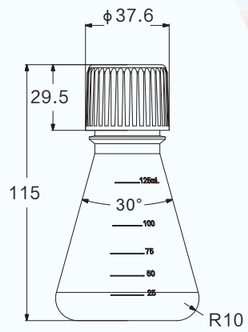

570125

Item No.	Volume	Sterile	Non−enzyme	Packaging Specifications
570125	125ml	Yes	Yes	1pc/bag,24pcs/carton
570250	250ml	Yes	Yes	1pc/bag,12pcs/carton
570500	500ml	Yes	Yes	1pc/bag,12pcs/carton
571000	1000ml	Yes	Yes	1pc/bag,6pcs/carton
572800	2.8L	Yes	Yes	1pc/bag,6pcs/carton
575000	5L	Yes	Yes	1pc/bag,4pcs/carton

Gloves

Features

- Gloves available in powder−free latex and nitrile
- Hypoallergenic gloves, original in Malaysia, no protein, no allergic reaction
- Glove texture design, easy to wear and grasp operation, rolled edge bowl design, more efficient take off and wear
- Compliant with EU standards, passed biocompatibility testing

Item No.	Material	Size	Color	Packaging Specifications
520002	Nitrile	S	Blue	100pcs/rack,10racks/carton
520003	Nitrile	M	Blue	100pcs/rack,10racks/carton
520004	Nitrile	L	Blue	100pcs/rack,10racks/carton
530002	Latex	S	Natural	100pcs/rack,10racks/carton
530003	Latex	M	Natural	100pcs/rack,10racks/carton
530004	Latex	L	Natural	100pcs/rack,10racks/carton

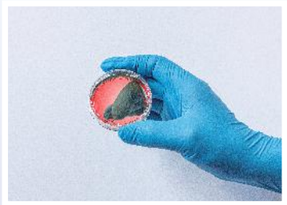

Serological Pipettes

Features

- High clarity PS material
- Available in 1ml, 2ml, 5ml, 10ml, 25ml, 50ml,100ml volume for options
- Ascending and descending bidirectional scale design for easy clarify the remaining liquid quantity
- Polyolefin filter, effectively prevent damage to pipetting equipment caused by excessive suction
- Edged color-coded band for identification
- Electron beam sterilization,Non-pyrogen, DNase-free, RNase-free, Endotoxin-free
- Package options: individually and bulk pack

Item No.	Volume	Color	Sterile	Non-enzyme	Packaging	Packaging Specifications
720001	1ml	Yellow	Yes	Yes	Individual	50pcs/bag,10bags/carton
720002	2ml	Green	Yes	Yes	Individual	50pcs/bag,10bags/carton
720005	5ml	Blue	Yes	Yes	Individual	50pcs/bag,10bags/carton
720010	10ml	Orange	Yes	Yes	Individual	50pcs/bag,8bags/carton
720025	25ml	Red	Yes	Yes	Individual	25pcs/bag,8bags/carton
720050	50ml	Purple	Yes	Yes	Individual	25pcs/bag,4bags/carton

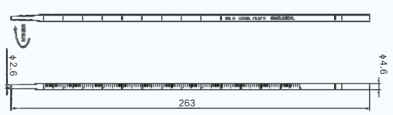

720001

720002

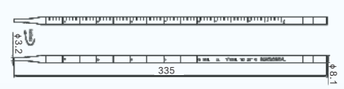

720005

720010

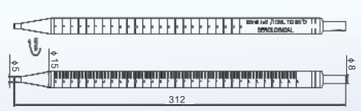

720025

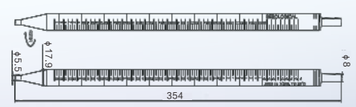

720050

Dimensions=mm

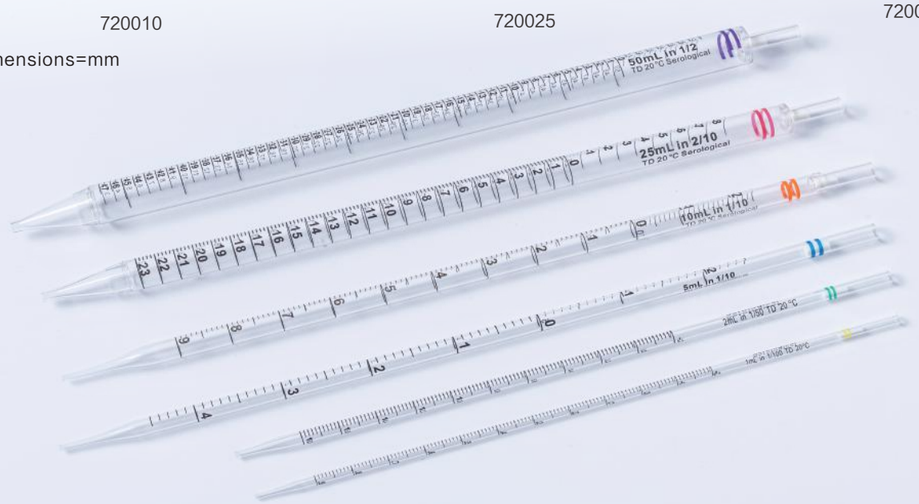

Cell Filters

Features

- Imported nylon screen
- Available in 40μm, 70μm, 100μm various size
- Artificial mechanics design, round handle, easy to operate
- Fits for 50ml centrifuge tubes
- DNase-free, RNase-free, Endotoxin-free
- Individually wrapped , E-beam Sterilization

Item No.	Mesh aperture	Color	Sterile	Non-enzyme	Packing	Packaging Specifications
700040	40μm	Blue	Yes	Yes	Individual	100pcs/carton
700070	70μm	White	Yes	Yes	Individual	100pcs/carton
700100	100μm	Yellow	Yes	Yes	Individual	100pcs/carton

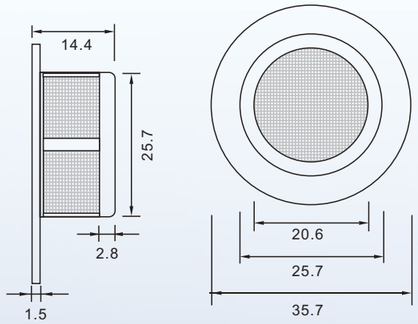

Dimensions=mm

Cell Culture Dishes

Features

- High transparency polystyrene material
- The bottom is flat and transparent, no light and distortion under the microscope
- Lid with stacking ring for easy stacking
- Dish lid ventilation grid design to ensure gas exchange
- Vacuum plasma TC treatment, excellent cell attachment
- E-beam Sterilization
- Pyrogen-free, Endotoxin-free

Item No.	Culture area	Recommended Volume	TC Treated	Sterile	Non-enzyme	Packaging Specifications
760035	8.5cm²	1.8-2.7ml	Yes	Yes	Yes	20pcs/bag,25bags/carton
760060	22.9cm²	4.2-6.3ml	Yes	Yes	Yes	20pcs/bag,25bags/carton
760100	57.6cm²	11-16.5ml	Yes	Yes	Yes	10pcs/bag,30bags/carton

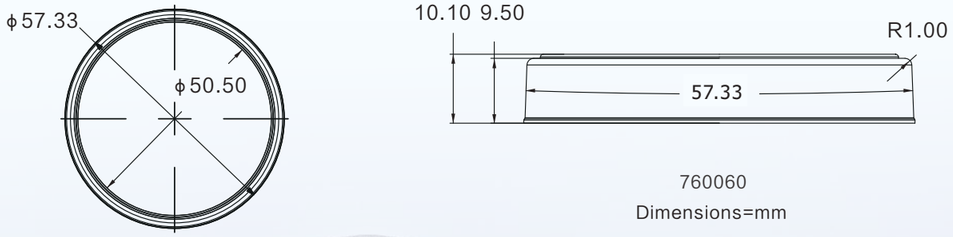

760060
Dimensions=mm

Cell Culture Flasks

Features

- 1.High transparency polystyrene material
- 2.Frosted writable area on bottle side with clear scale
- 3.Stacking design is not easy to slip off, easy to stack
- 4.E-beam Sterilization
- 5.Non-pyrogen, Endotoxin-free

Item No.	Growth area	Volume	Breathable cover	TC Treated	Sterile	Non-enzyme	Packaging Specifications
750025	25cm²	50ml	Yes	Yes	Yes	Yes	12pcs/bag,25bags/carton
750075	75cm²	250ml	Yes	Yes	Yes	Yes	5pcs/bag,18bags/carton
750175	175cm²	750ml	Yes	Yes	Yes	Yes	5pcs/bag,10bags/carton

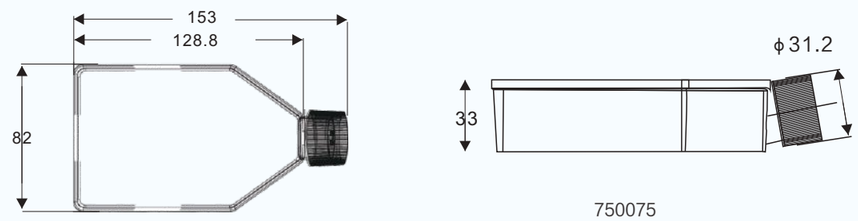

750075
Dimensions=mm

Cell Culture Plates

Features

- 1.High transparency polystyrene material
- 2.Plate cover chamfered design with condensation ring to reduce the chance of contamination
- 3.Each hole is coded for easy identification
- 4.More selections of matching plates: 6-well, 12-well,24-well, 48-well, 96-well
- 5.Non-pyrogen, Endotoxin-free, DNase-free, RNase-free
- 6.Individually packaged in blister box
- 7.E-beam Sterilization

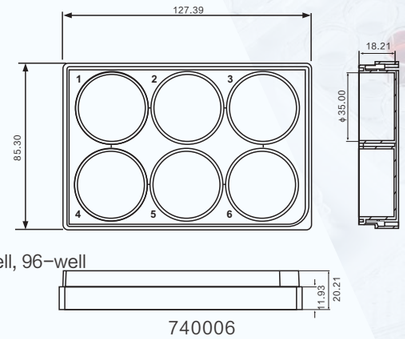

Dimensions=mm

Item No.	Dimension	single well culture area	Volume	TC Treated	Sterile	Non-enzyme	Packing	Packaging Specifications
740006	6-well，85.4x127.6mm	9.5cm²	1.9-2.9ml	Yes	Yes	Yes	individual	50pcs/carton
740012	12-well，85.4x127.6mm	3.6cm²	0.76-1.14ml	Yes	Yes	Yes	individual	50pcs/carton
740024	24-well，85.4x127.6mm	1.9cm²	0.38-0.57ml	Yes	Yes	Yes	individual	50pcs/carton
740048	48-well，85.4x127.6mm	0.88cm²	0.19-0.285ml	Yes	Yes	Yes	individual	50pcs/carton
740096	96-well，85.4x127.6mm	0.32cm²	0.1-0.2ml	Yes	Yes	Yes	individual	50pcs/carton

Enzyme Label Plates

Features

- 1.High transparency polystyrene material
- 2.Removable , dedicated to Elisa experiments
- 3.Comply with ANSI-SBS standard, CV value between holes <5%
- 4.DNase-free, RNase-free, Endotoxin-free

Item No.	Volume	Color	Type	Sterile	Non-enzyme	Packaging Specifications
672001	0.4ml	Transparent	F8*12	No	Yes	10pcs/bag,20bags/carton
672002	0.4ml	Transparent	F12*8	No	Yes	10pcs/bag,20bags/carton
672101	0.4ml	Transparent	F8*12	No	Yes	10pcs/bag,20bags/carton
672102	0.4ml	Transparent	F12*8	No	Yes	10pcs/bag,20bags/carton

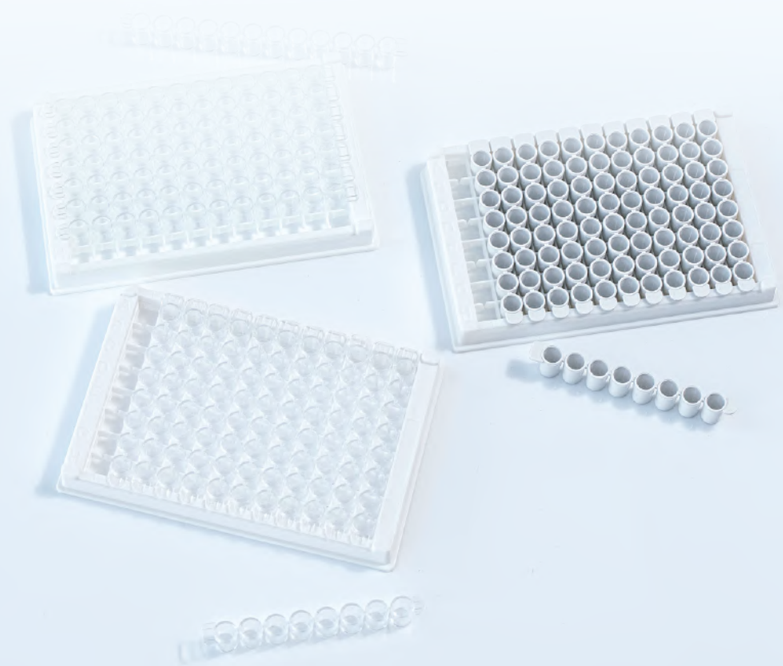

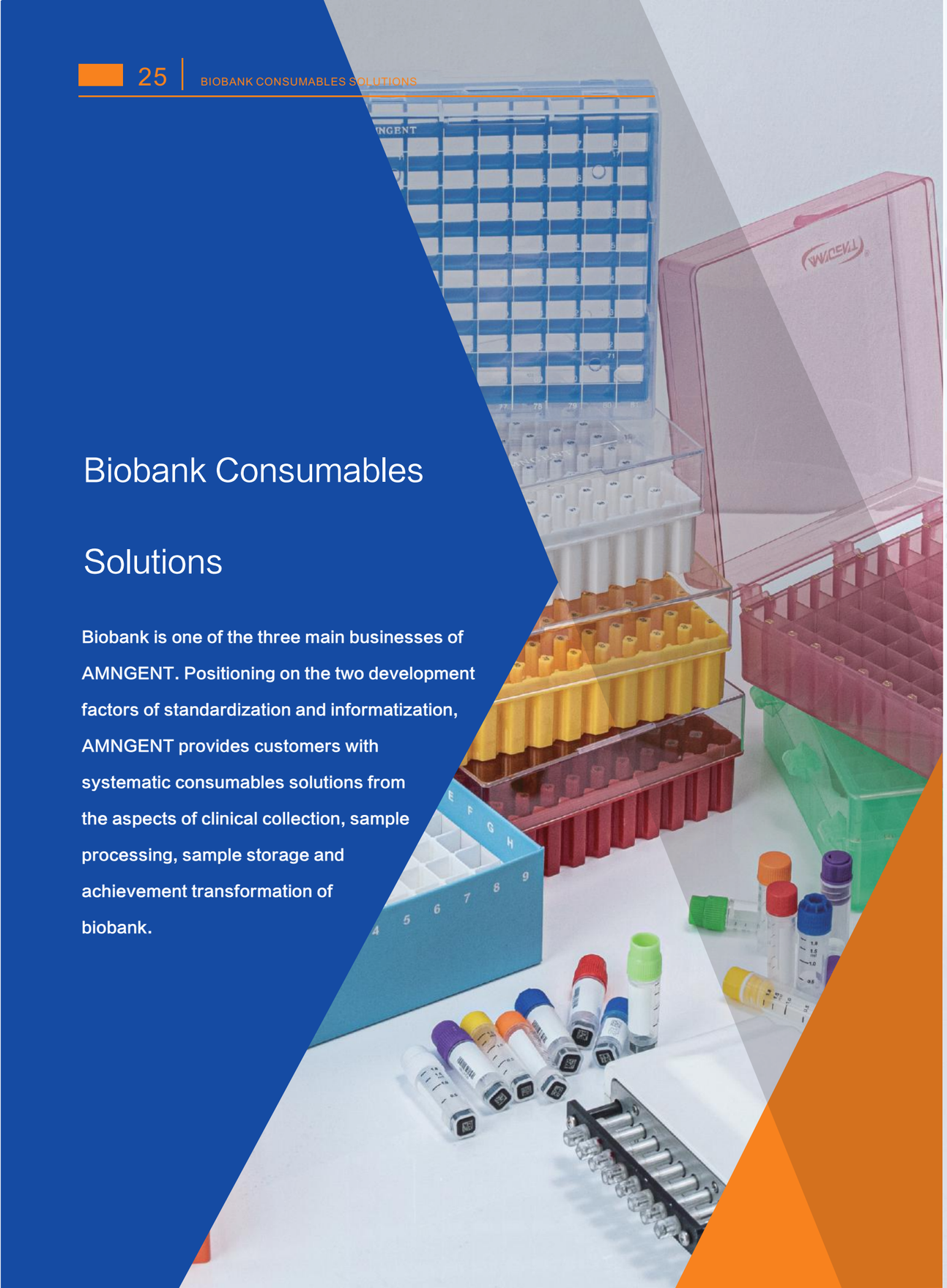

Biobank Consumables Solutions

Biobank is one of the three main businesses of AMNGENT. Positioning on the two development factors of standardization and informatization, AMNGENT provides customers with systematic consumables solutions from the aspects of clinical collection, sample processing, sample storage and achievement transformation of biobank.

Traditional Cryogenic Vials

General CryoTubes Feature

- Medical grade PP material
- Available in 0.5ml, 1.5ml, 2ml and 5ml for options
- 0.5ml, 1.5ml are suitable for 100wells standard Cryovial box, 2.0ml is suitable for 81wells standard Cryovial box.
- Cap color for options: Red, Yellow, Blue, Green, White, Purple, Orange
- E-Beam Sterile, RNase & DNase Free, Endotoxin Free

Specification

- Temperature Range: stable from −196° C to 121° C Nitrogen canister storage

Item No.	Volume	Color	Type	Cap Style	Sterile	Packaging Specifications
66005X[X=0,1,2,3,4,5,6]	0.5ml	white/red/green/Blue/yellow/Purple/orange	External Thread	Flat cap	Yes	50pcs/bag, 20bags/carton
66015X[X=0,1,2,3,4,5,6]	1.5ml	white/red/green/Blue/yellow/Purple/orange	External Thread	Flat cap	Yes	50pcs/bag, 20bags/carton
66120X[X=0,1,2,3,4,5,6]	2.0ml	white/red/green/Blue/yellow/Purple/orange	External Thread	no insert	Yes	50pcs/bag, 20bags/carton
66220X[X=0,1,2,3,4,5,6]	2.0ml	white/red/green/Blue/yellow/Purple/orange	External Thread	Flat cap	Yes	50pcs/bag, 20bags/carton
66121X[X=0,1,2,3,4,5,6]	2.0ml	white/red/green/Blue/yellow/Purple/orange	Internal Thread	no insert	Yes	50pcs/bag, 20bags/carton
66221X[X=0,1,2,3,4,5,6]	2.0ml	white/red/green/Blue/yellow/Purple/orange	Internal Thread	no insert	Yes	50pcs/bag, 20bags/carton
66000Xcap plug series[X=0,1,2,3,4,5]	fitted2.0ml	white/red/green/Blue/yellow/Purple/orange	fitted with internal cap	——	Yes	200pcs/bag，10bags/carton
66050X[X=0,1,2,3,4,5,6]	5.0ml	white/red/green/Blue/yellow/Purple/orange	External Thread	no insert	Yes	50pcs/bag, 20bags/carton

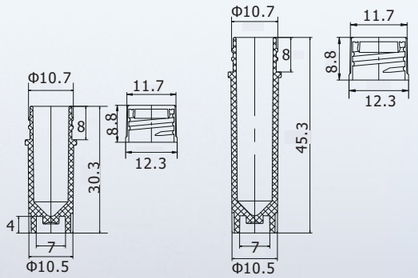

0.5ml外旋

1.5ml外旋

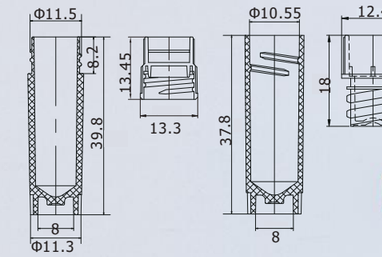

2.0ml外旋

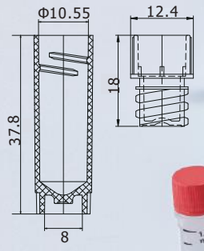

2.0ml内旋

Dimensions=mm

2D Cryogenic Vials

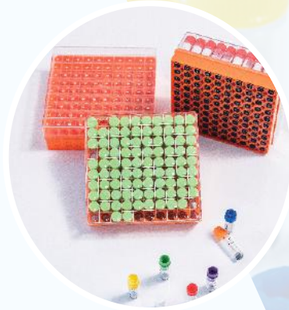

Feature

- Medical grade PP material
- Available in 0.5ml, 1.5ml, 2ml and 5Ml for options
- Suitable for 10*10 cryovial boxes to increase storage capacity.
- Cap Color for options: Red, Yellow, Blue, Green, White, Purple, Orange
- E-Beam Sterile, RNase & DNase Free, Endotoxin Free, Exogenous DNA Free
- Bottom QR code, Side barcode and digital code (3-in-1), all tubes coded message is unique

Specification

- Temperature range: stable from -196° C to 121° C

Item No.	Volume	Color	Type	Side barcode	Bottom QR code	Sterile	Packaging Specifications
67005X[X=0,1,2,3,4,5,6]	0.5ml	White/red/green/blue/yellow/purple/orange	External Thread	Yes	No	Yes	50pcs/bag, 20bags/carton
67015X[X=0,1,2,3,4,5,6]	1.5ml	White/red/green/blue/yellow/purple/orange	External Thread	Yes	No	Yes	50pcs/bag, 20bags/carton
67120X[X=0,1,2,3,4,5,6]	2.0ml	White/red/green/blue/yellow/purple/orange	External Thread	Yes	No	Yes	50pcs/bag, 20bags/carton
67220X[X=0,1,2,3,4,5,6]	2.0ml	White/red/green/blue/yellow/purple/orange	External Thread Flat cap	Yes	No	Yes	50pcs/bag, 20bags/carton
67121X[X=0,1,2,3,4,5,6]	2.0ml	White/red/green/blue/yellow/purple/orange	Internal Thread	Yes	No	Yes	50pcs/bag, 20bags/carton
67221X[X=0,1,2,3,4,5,6]	2.0ml	White/red/green/blue/yellow/purple/orange	Internal Thread with cap plug	Yes	No	Yes	50pcs/bag, 20bags/carton
67605X[X=0,1,2,3,4,5,6]	0.5ml	White/red/green/blue/yellow/purple/orange	External Thread	Yes	Yes	Yes	50pcs/bag，10bags/inner box，2inner boxes/carton
67615X[X=0,1,2,3,4,5,6]	1.5ml	White/red/green/blue/yellow/purple/orange	External Thread	Yes	Yes	Yes	50pcs/bag，10bags/inner box，2inner boxes/carton
67620X[X=0,1,2,3,4,5,6]	2.0ml	White/red/green/blue/yellow/purple/orange	External Thread	Yes	Yes	Yes	50pcs/bag，10bags/inner box，2inner boxes/carton
67820X[X=0,1,2,3,4,5,6]	2.0ml	White/red/green/blue/yellow/purple/orange	External Thread automatic cap	Yes	Yes	Yes	50pcs/bag，10bags/inner box，2inner boxes/carton
67621X[X=0,1,2,3,4,5,6]	2.0ml	White/red/green/blue/yellow/purple/orange	Internal Thread	Yes	Yes	Yes	50pcs/bag，10bags/inner box，2inner boxes/carton
68005X[X=0,1,2,3,4,5,6]	0.5ml	White/red/green/blue/yellow/purple/orange	External Thread	Yes	Yes	Yes	100pcs/rack，5racks/inner box，10inner boxes/carton
68015X[X=0,1,2,3,4,5,6]	1.5ml	White/red/green/blue/yellow/purple/orange	External Thread	Yes	Yes	Yes	100pcs/rack，5racks/inner box，10inner boxes/carton
68121X[X=0,1,2,3,4,5,6]	2.0ml	White/red/green/blue/yellow/purple/orange	Internal Thread	Yes	Yes	Yes	100pcs/rack，5racks/inner box，10inner boxes/carton
68120X[X=0,1,2,3,4,5,6]	2.0ml	White/red/green/blue/yellow/purple/orange	External Thread	Yes	Yes	Yes	100pcs/rack，5racks/inner box，10inner boxes/carton
68820X[X=0,1,2,3,4,5,6]	2.0ml	White/red/green/blue/yellow/purple/orange	External Thread automatic cap	Yes	Yes	Yes	100pcs/rack，5racks/inner box，10inner boxes/carton

SBS CryoTubes

Feature

- Tube Medical grade PP material; Rack: PC material
- Available in 0.5ml, 0.75ml, 1ml, 2ml and 5ml volumes for options
- Automatic caps is suitable for single-channel and multi-channel automatic cap opener
- Suitable for SBS cryogenic racks, 0.5ml,0.75ml and 1ml are suitable for 96wells rack, 2ml and 5ml are suitable for 48wells rack.
- E-Beam Sterile, RNase & DNase Free, Endotoxin Free
- Bottom QR code, Side barcode and digital code (3-in-1) , all coded message on the tube is same and unique. to ensure sample information security.

Item No.	Volume	Style	Type	3-in-1	Sterile	Packaging Specifications
684300	300μl	SBS tube+SBS rack	External Thread	有	Yes	96pcs/rack，10racks/inner box，40inner boxes/carton
684500	500μl	SBS tube+SBS rack	External Thread	有	Yes	96pcs/rack，10racks/inner box，40inner boxes/carton
684750	750μl	SBS tube+SBS rack	External Thread	有	Yes	96pcs/rack，10racks/inner box，40inner boxes/carton
684101	1000μl	SBS tube+SBS rack	External Thread	有	Yes	96pcs/rack，10racks/inner box，40inner boxes/carton
684201	2ml	SBS tube+SBS rack	External Thread	有	Yes	48pcs/rack，10racks/inner box，40inner boxes/carton
684501	5ml	SBS tube+SBS rack	External Thread	有	Yes	48pcs/rack，10racks/inner box，40inner boxes/carton

Carboard Cryo boxes

Feature

- Made from strong durable cardboard with superior white outer coatings.
- Surface water proofing.
- white glossy film and color matte film for options
- Writing area on the cover for easy sample clarify
- 2inch cryovial boxes are suitable for 1.5ml and 2.0ml cryovials, and 3 inches box are suitable for 5ml cryovials.

Specification

- temperature range : stable from −196 C to 121 C

Item No.	Height	Well	Outter size	Color	Film Style	Packaging Specifications
810100	1 Inch	100−well	133*133*36mm	white	white glossy film	5pcs/pack，10packs/carton
810281	2 Inch	81−well	133*133*52mm	white	white glossy film	5pcs/pack，10packs/carton
810200	2 Inch	100−well	133*133*52mm	white	white glossy film	5pcs/pack，10packs/carton
810316	2 Inch	16−well	133*133*62mm	red	red glossy film	4pcs/pack，10packs/carton
810249	2 Inch	49−well	133*133*42mm	blue	blue glossy film	6pcs/pack，10packs/carton
815281	2 Inch	81−well	133*133*52mm	red	colorful matte film	5pcs/pack，10packs/carton
815200	2 Inch	100−well	133*133*52mm	colorful	colorful matte film	5pcs/pack，10packs/carton
810381	3 Inch	81−well	133*133*76mm	white	white glossy film	5pcs/pack，10packs/carton

Dimensions=mm

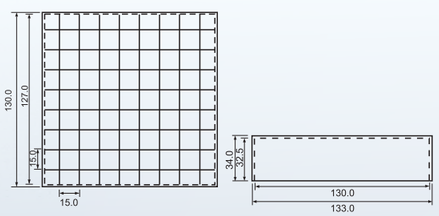

810281/810581

Hinged lid Cardboard Cryo Boxes

Feature

- Available in Flip type with PP block
- The box body is made of extra−thick cardboard, and the surface is covered with a waterproof film.
- Pre−set grid table no. on the box lid, printed box body number, easy to locate the sample position.
- Multi−specification cryo boxes are suitable for multi−specification cryovials or microtubes.

Item No.	Height	Well	Size	Color	Block Material	Packaging Specifications
820100	1 Inch	100−well	133*133*36mm	blue	PP	8pcs/pack，10packs/carton
820281	2 Inch	81−well	133*133*52mm	blue	PP	5pcs/pack，10packs/carton
820200	2 Inch	100−well	133*133*52mm	blue	PP	5pcs/pack，10packs/carton
820381	3.75 Inch	81−well	133*133*95mm	blue	PP	3pcs/pack，10packs/carton

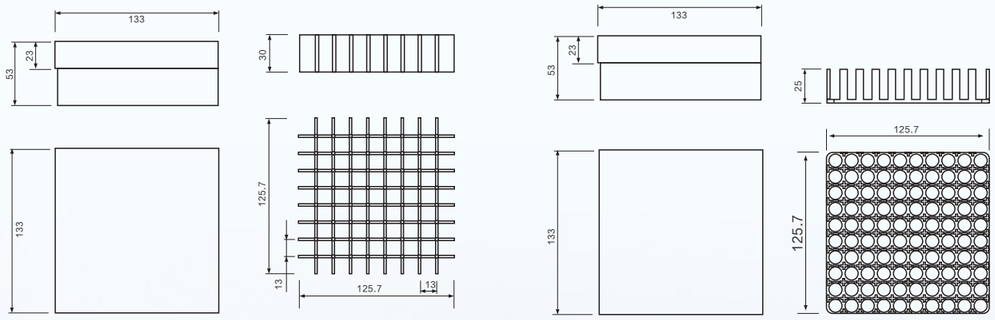

820281

820200

Dimensions=mm

PP Cryo boxes

Feature

- Medical grade polypropylene material, chemically resistant to alcohols and mild organic solvents.
- Multiple colors for easy sample identification
- Available in 25-well, 81-well, 100-well removable cover, suitable for 1.5ml, 2.0ml cryovials. 100-well clamshell type suitable for 1.5ml cryovials.
- International standard size for easy adaptation to standard freezer racks.

Specification

- Working temperature: stable from -80° C to 121° C

Item No.	Height	Well	Size	Color	Packaging Specifications
821281	2 Inch	81-well	133*133*52mm	assorted color	5pcs/pack，4packs/carton
821281-W	2 Inch	81-well	133*133*52mm	transparent	5pcs/pack，4packs/carton
821281-R	2 Inch	81-well	133*133*52mm	transparent red	5pcs/pack，4packs/carton
821281-B	2 Inch	81-well	133*133*52mm	transparent blue	5pcs/pack，4packs/carton
821281-Y	2 Inch	81-well	133*133*52mm	transparent yellow	5pcs/pack，4packs/carton
821281-G	2 Inch	81-well	133*133*52mm	transparent green	5pcs/pack，4packs/carton
821201	2 Inch	100-well	143*154*52mm	assorted color	5pcs/pack，4packs/carton

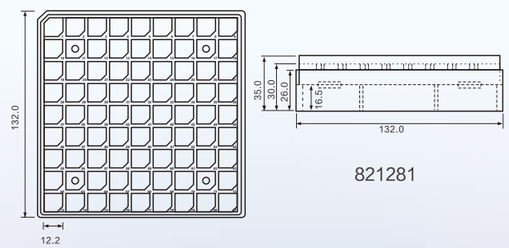

821281

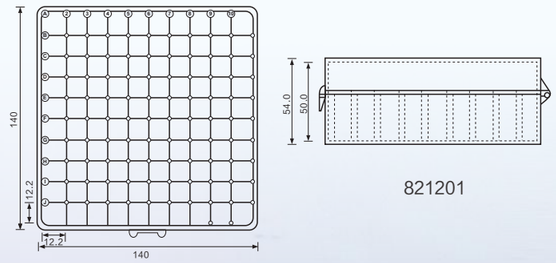

821201

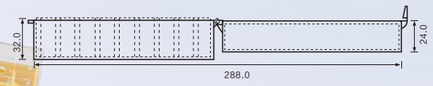

Dimensions=mm

PC Cryo Boxes

Feature

- Medical grade polycarbonate material
- Available in 25-well, 81-well, and 100-well freezer boxes, suitable for 0.5ml, 1.5ml, 2.0ml cryovials and microtubes.
- The box body is preset with positioning marks, and the unique slot and line design facilitates rapid cooling.
- The box cover is designed with cut corners, which is convenient for the box cover to be placed quickly and accurately.
- Five colors for your options.

Specification

- Suitable for storage in ultra-low temperature refrigerators and liquid nitrogen environments.
- Working temperature: stable from -196° C to 121° C

Item No.	Height	Well	Size	Color	Type	Packaging Specifications
822225	2 Inch	25-well	76*76*52mm	orange	general	5pcs/pack，6packs/carton
822281	2 Inch	81-well	133*133*52mm	assorted color	general	5pcs/pack，4packs/carton
822200	2 Inch	100-well	133*133*52mm	assorted color	general	5pcs/pack，4packs/carton
822381	3.75 Inch	81-well	133*133*95mm	assorted color	general	5pcs/pack，4packs/carton
861100	1 Inch	100-well	133*133*36mm	orange	bottom hollow	5pcs/pack，4packs/carton
861150	2 Inch	100-well	133*133*52mm	orange	bottom hollow	5pcs/pack，4packs/carton
861200	2 Inch	100-well	136*136*52mm	orange	bottom hollow	5pcs/pack，4packs/carton

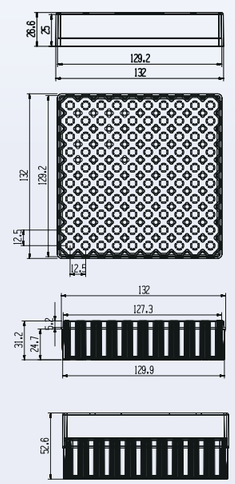

822200
Dimensions=mm

Gradient Cooling Boxes

Feature

- New material design, energy saving and environmental protection.
- Core cooling technology, solid core and insulating design, it can be used directly without pre-cooling.
- Suitable for 1.5ml, 2.0ml cryovials
- The cooling rate is consistent, the cell recovery performance is stable, and the survival rate is high.
- In the absence of alcohol and any liquid, the cooling rate of the sample in the low temperature refrigerator can be guaranteed to be −1° C/min. It can be applied to various cell types, including stem cells, Primary cell cassette cell line. The box is easy to use, just insert the cryovials and put it in the environment of −80℃. Not only can it greatly improve the user's work efficiency and the survival rate of preserved cells, but also it is safer and more worry-free for the human body, the environment and the samples.

Item No.	Volume	Match	Packaging Specifications
900112	12pcs	1.5ml、2.0ml cryogenic vials	1pcs/carton

Frame Freezer Racks

Feature

- Flanging treatment, no risk of scratching.
- Replaceable color tag, it can be identified in frost conditions.
- OEM size and shape available for the customer required
- Made of imported stainless steel, resistant to high and low temperatures, and acid and alkali resistant
- The thickness of the steel plate is 0.4mm−0.5mm, and the top layer of the refrigerator is easy to take.

Item No.	Material	Size(D*W*H)	Storage capacity	Match the size with cryobox
701212	Stainless steel	420*140*229mm	3*4	133*133*52mm
701215	Stainless steel	420*140*280mm	3*5	133*133*52mm
701216	Stainless steel	560*140*229mm	4*4	133*133*52mm
701220	Stainless steel	560*140*280mm	4*5	133*133*52mm
701224	Stainless steel	560*140*336mm	4*6	133*133*52mm
701225	Stainless steel	695*140*280mm	5*5	133*133*52mm

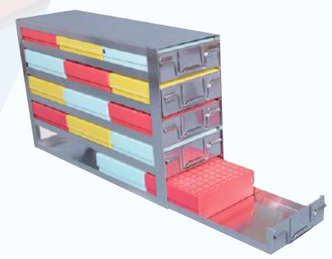

Sliding Drawer Freezer Racks

Feature

- Fold-over guide rail to reduce frost, the whole plate is stamped and formed.
- Replaceable color tag, can be identified in frost conditions.
- Made of imported stainless steel, resistant to high and low temperatures, acid and alkali.
- The thickness of the steel plate is 0.5mm−1.0mm, which is strong and durable.
- The design of the guide rail solves the problem of frosting on the shelf of the freezing rack.
- OEM ok offer : size and shape available for the customer required

Item No.	Material	Size(D*W*H)	Storage capacity	Match the size with cryobox
702212	不锈钢	420*140*280mm	3*4	133*133*52mm
702216	不锈钢	560*140*228mm	4*4	133*133*52mm
702220	不锈钢	560*140*280mm	4*5	133*133*52mm
702224	不锈钢	560*140*336mm	4*6	133*133*52mm
702225	不锈钢	695*140*280mm	5*5	133*133*52mm

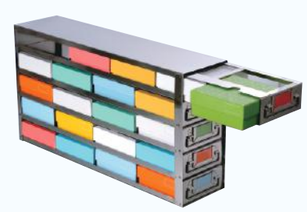

Side Access Drawer Freezer Racks

Feature

- Electric welding, lightweight and convenient.
- Made of imported stainless steel, resistant to high and low temperatures, acid and alkali.
- The design of the guide rail solves the problem of frosting on the shelf of the freezing rack.
- The thickness of the steel plate is 0.5mm−1.0mm, which is strong and durable.
- Freezer racks can be customized according to the actual needs of users.

Item No.	Material	Size(D*W*H)	Storage capacity	Match the size with cryobox
703212	Stainless steel	440*141*229mm	3*4	133*133*52mm
703216	Stainless steel	564*141*229mm	4*4	133*133*52mm
703220	Stainless steel	564*141*285mm	4*5	133*133*52mm
703224	Stainless steel	564*141*341mm	4*6	133*133*52mm
703225	Stainless steel	700*141*285mm	5*5	133*133*52mm

Horizontal Freezer Racks

Feature

- One punch forming, strong and durable.
- Made of imported stainless steel, resistant to high and low temperatures, acid and alkali.
- The thickness of the steel plate is 0.4mm-0.8 mm, and it is easy to take.
- OEM ok offer : size and shape available for the customer required

Item No.	Material	Type	Size(D*W*H)	Storage capacity	Match The Size With Cryobox
704210	Stainless steel	Hand-carrying freezer rack	143*137*560mm	1*10	133*133*52mm
704211	Stainless steel	Hand-carrying freezer rack	143*137*616mm	1*11	133*133*52mm
704212	Stainless steel	Hand-carrying freezer rack	143*137*672mm	1*12	133*133*52mm
704213	Stainless steel	Hand-carrying freezer rack	143*137*728mm	1*13	133*133*52mm
704214	Stainless steel	Hand-carrying freezer rack	143*137*784mm	1*14	133*133*52mm
704215	Stainless steel	Hand-carrying freezer rack	143*137*840mm	1*15	133*133*52mm

Self Fixation Freezer Racks

Feature

- Electric welding, lightweight and convenient.
- Made of imported stainless steel, resistant to high and low temperatures, acid and alkali.
- The design of the guide rail solves the problem of frosting on the shelf of the freezing rack.
- The thickness of the steel plate is 0.5mm-1.0mm, which is strong and durable.
- OEM ok offer : size and shape available for the customer required

Item No.	Material	Type	Size(D*W*H)	Storage capacity
735207	Stainless steel	Hand-carrying freezer rack	139*139*410mm	1*7
735210	Stainless steel	Hand-carrying freezer rack	139*139*580mm	1*10
735213	Stainless steel	Hand-carrying freezer rack	139*139*751mm	1*13
735214	Stainless steel	Hand-carrying freezer rack	139*139*808mm	1*14
735215	Stainless steel	Hand-carrying freezer rack	139*139*865mm	1*15
736207	Stainless steel	Hand-carrying freezer rack of SBS box	135*96*388mm	1*7
736213	Stainless steel	Hand-carrying freezer rack of SBS box	135*96*712mm	1*13
736214	Stainless steel	Hand-carrying freezer rack of SBS box	135*96*766mm	1*14
736215	Stainless steel	Hand-carrying freezer rack of SBS box	135*96*820mm	1*15

Scanning Gun & Scanner

> Scanning Gun

Feature

- USB link, plug and play
- Both ok scan for Barcodes and QR codes
- Infrared technology, high-speed identification

> First Generation Scanner

Feature

- Support 133*133mm double boxes simultaneous scanning
- Support SBS three boxes simultaneous scanning.
- Fast image scanning technology.
- Using open ports, it can be connected with mainstream soft ware databases.

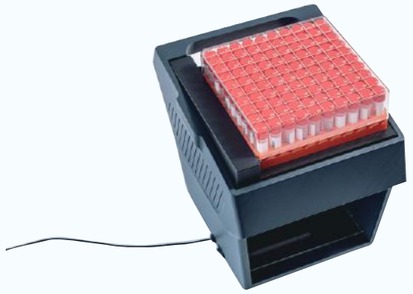

> Second Generation Scanner

Feature

- Compatible with any cryogenic box within 133*133mm.
- Decoding time: less than or equal to 5 seconds.
- Plug and play, no software installation required.
- Using HTTP service interface, it can be connected to any software database.

Product Name	Item No.	Type	Packaging Specifications
Scanning Gun	691101	single scanning	1 pcs/carton
First Generation Scanner	692101	rack scanning	1 set/carton
Second Generation Scanner	692102	rack scanning	1 set/carton

SBS 8-tube Lid Openers

Feature

- 3 seconds fast automatic column opening and closing of the lid.
- Long battery standby time, standby time is greater than or equal to 30 days.
- Quiet type, the noise of opening and closing cover is less than or equal to 5 decibels.
- The second-generation lid opener is equipped with an LED digital display screen, and the rotation speed is optional.
- The cap opener gear can be customized to fit multiple brands of SBS cryovials.

Item No.	LED digital display screen	Speed regulation	Packaging Specifications
695008	NO	non-adjustable	pcs/carton
695018	Yes	Two-step adjustable	pcs/carton

SBS Whole-box Lid Openers

Feature

- Integrate automated workflows.
- Independent motor system, real-time monitoring of torque and torsion.
- Compatible with SBS 48-well, 96-well plate rack and traditional 133*133 mm plate rack.
- The whole plate opening time is less than 10 seconds.

Item No.	Match	Packaging Specifications
695048	2ml 、5ml whole plate SBS cryotube	1 set/carton
695096	500μl 、750μl、1000μl whole plate SBS cryotube	1 set/carton

Cryogenic Vials Lid Openers

Feature

- It is suitable for all kinds of cryovials caps within diameter of 10-30mm, and the diameter of the caps is automatically checked.
- The number of thread turns is adjustable and the accuracy is 1/360 turn.
- The speed is 180~240rpm, and the opening time is 1.5s.
- 4.3 inch LCD touch screen.
- 240V power supply, suitable for all kinds of power supply, safe operation.

Item No.	Accuracy	Speed	Opening time	Packaging Specifications
695000	1/360turn	180~240rpm	1.5s	1 set/carton

Low-temperature Label Printers & Labels

Feature

- Thermal printer, resolution 300DPI.
- 3.5-inch color display panel.
- Low temperature labels : -86 degree labels and -196 degrees liquid nitrogen labels ok offer
- Low temperature labels are resistant to chemicals and solvents.
- Available for Customized

Product Name	Item No.	Temperature	Packaging Specifications
Low-temperature Label Printers	T4000	——	1 set/carton
Ribbon	910000	——	1 roll/carton
Low Temperature Label	920200	-86℃	3000 pcs/carton
Liquid Nitrogen Label	920201	-196℃	3000 pcs/carton

Sample Library Management Software

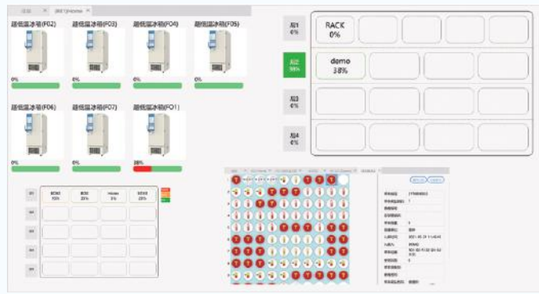

- Login interface sample view, sample management, space management, approval, alarm management, system management, user settings, help information and other functions are clear at a glance.
- The system can intuitively display the storage container equipment in the bacterial bank, according to the refrigerator−freezing rack− cryobox − cryovials, the storage structure is displayed on a graphical interface.

- The system supports the viewing of relevant operation logs and information change records of storage containers and strain samples through the page, so as to ensure the integrity of the data records of the samples in the library and facilitate the traceability of the samples.

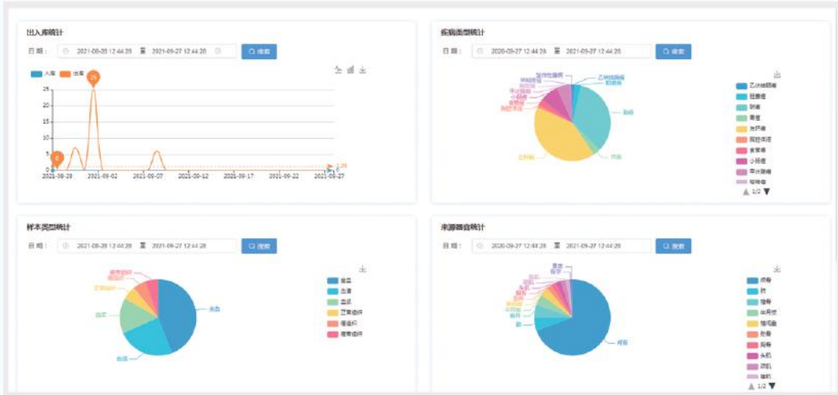

- The system supports users to make statistics on the number of in−stock items on a yearly, quarterly, and monthly basis. Custom statistics can be made based on the relevant information of the stored samples, and the corresponding icons can be displayed in perspective.

IVD Solution Consumables

随着医疗市场的发展，塑料容器被广泛的应用于医药、体外诊断行业，且备受追崇，安进特以大产能、高品质提供各种应用于合成低聚核苷酸、酶、缓冲液的塑料容器，以及成品样本采集转运培养基，从采集、保存、提取等环节为客户提供系统的耗材解决方案。

Screw Cap Microtubes- Short Cap

Feature

- Medical grade PP material with Silicon O-Ring inside
- Self-Standing Vials, External Thread, with Sealing O-Rin inside
- Sarstedt series short cap style
- Available in 0.5ml, 1.5ml, or 2.0ml volumes for options
- Test: -80Kpa negative pressure sealing
- NDase and RNase free, endotoxin free , No heavy metal
- E-beam Sterile
- Compliant with Biocompatibility test report
- Strong chemical resistance to acid and alkali alcohols

Dimensions=mm

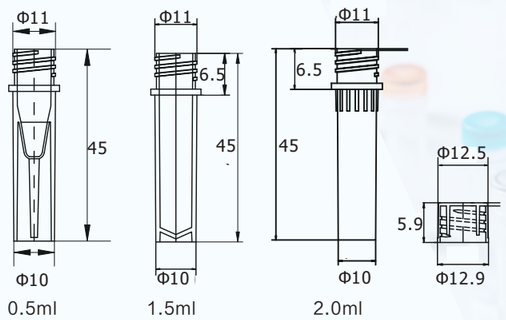

Item No.	Volume	Color	Cap style	Sterile	No enzyme	Packaging Specifications
630000Series caps	——	Natural /Red/Yellow/Blue/Green/Purple/Pink/Brown	Short Cap	NO	YES	500pcs/bag.10bags/case
630050	0.5ml	Natural	——	NO	YES	500pcs/bag.10bags/case
630150	1.5ml	Natural	——	NO	YES	500pcs/bag.10bags/case
630200	2.0ml	Natural	——	NO	YES	500pcs/bag.10bags/case
633000Series caps	——	Natural /Red/Yellow/Blue/Green/Purple/Pink/Brown	Short Cap	NO	YES	500pcs/bag.10bags/case
633050	0.5ml	Natural	——	YES	YES	500pcs/bag.10bags/case
633150	1.5ml	Natural	——	YES	YES	500pcs/bag.10bags/case
633200	2.0ml	Natural	——	YES	YES	500pcs/bag.10bags/case
636050	0.5ml	Natural ,Tube & cap assembled	Short Cap	YES	YES	50pcs/bag.40bags/case
636150	1.5ml	Natural ,Tube & cap assembled	Short Cap	YES	YES	50pcs/bag.40bags/case
636200	2.0ml	Natural ,Tube & cap assembled	Short Cap	YES	YES	50pcs/bag.40bags/case

Screw Cap Microtubes-- High Cap

Features

- Medical grade PP material with Silicon O-Ring inside
- Self-Standing Vials, External Thread, with Sealing O-Rin inside
- Axygen series high cap Available in 0.5ml, 1.5ml, or 2.0ml volumes for options
- Test: -80Kpa negative pressure sealing
- NDase and RNase free, endotoxin free , No heavy metal
- E-beam Sterile
- Compliant with Biocompatibility test report Strong chemical resistance to acid and alkali alcohols

Item No.	Volume	Color	Writing area	Sterile	No enzyme	Packaging Specifications
610000Series caps	——	Natural /Red/Yellow/Blue/Green/Purple/Pink/Brown	NO	NO	YES	500pcs/bag,10bags/case
610000X series cap {X=1,2,,3,4,5,6,7}	——	Solid Red/Yellow/Blue/Green/Orange/ White	NO	NO	YES	500pcs/bag,10bags/case
620000 cap	——	Brown	NO	NO	YES	500pcs/bag,10bags/case
610050/51	0.5ml	Natural /Brown	NO	NO	YES	500pcs/bag,10bags/case
610150/151	1.5ml	Natural /Brown	NO	NO	YES	500pcs/bag,10bags/case
610200/201	2.0ml	Natural /Brown	NO	NO	YES	500pcs/bag,10bags/case
613000series cap	——	Natural /Red/Yellow/Blue/Green/Purple/Pink/Brown	NO	YES	YES	500pcs/bag,10bags/case
61300X {X=1,2,,3,4,5,6,7}	——	Solid Red/Yellow/Blue/Green/Orange/ White	NO	YES	YES	500pcs/bag,10bags/case
623000	——	brown	NO	YES	YES	500pcs/bag,10bags/case
613050/51	0.5ml	Natural /Brown	NO	YES	YES	500pcs/bag,10bags/case
613150/151	1.5ml	Natural /Brown	NO	YES	YES	500pcs/bag,10bags/case
613200/201	2.0ml	Natural /Brown	NO	YES	YES	500pcs/bag,10bags/case
616050/51	0.5ml	Natural /Brown,Tube & cap assembly	NO	YES	YES	50pcs/bag,40bags/case
616150/151	1.5ml	Natural /Brown,Tube & cap assembled	NO	YES	YES	50pcs/bag,40bags/case
616200/201	2.0ml	Natural /Brown,Tube & cap assembled	NO	YES	YES	50pcs/bag,40bags/case
617200	2.0ml	Natural ,Tube & cap assembled	YES	YES	YES	50pcs/bag,40bags/case

Dimensions=mm

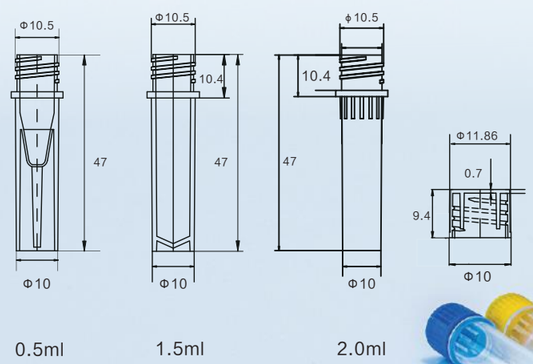

Reagent Bottles

Features

- Medical grade PP and HDPE material
- Cap: PP material. Bottle : PP & HDPE both material for options.
- NDase /RNase free, No heavy metal ,Sterile or no Sterile both for options
- PP material are autoclavable a 121’C, HDPE material can be used in freezer down to −80’C
- Available in 8ml, 15ml, 30ml, 60ml, 125ml, 250ml, 500ml, 1000ml volume for options

Item No.	Volume	Material	Color	Sterile	No enzyme	Packaging Specifications
5X0008	8ml	pp cap, pp bottle	Transparency	X=0, No Sterile; when X=5, Sterilized	YES	100caps/bag,100tubes/bag,1000sets/case
5X1008	8ml	pp cap, HDPE bottle	Natural color	X=0, No Sterile; when X=5, Sterilized	YES	100caps/bag,100tubes/bag,1000sets/case
5X2008	8ml	pp cap, HDPE bottle	Dark brown	X=0, No Sterile; when X=5, Sterilized	YES	100caps/bag,100tubes/bag,1000sets/case
5X0015	15ml	pp cap, pp bottle	Transparency	X=0, No Sterile; when X=5, Sterilized	YES	100caps/bag,100tubes/bag,1000sets/case
5X1015	15ml	pp cap, HDPE bottle	Natural color	X=0, No Sterile; when X=5, Sterilized	YES	100caps/bag,100tubes/bag,1000sets/case
5X2015	15ml	pp cap, HDPE bottle	Dark brown	X=0, No Sterile; when X=5, Sterilized	YES	100caps/bag,100tubes/bag,1000sets/case
5X0030	30ml	pp cap, pp bottle	Transparency	X=0, No Sterile; when X=5, Sterilized	YES	100caps/bag,100tubes/bag,1000sets/case
5X1030	30ml	pp cap, HDPE bottle	Natural color	X=0, No Sterile; when X=5, Sterilized	YES	100caps/bag,100tubes/bag,1000sets/case
5X2030	30ml	pp cap, HDPE bottle	Dark brown	X=0, No Sterile; when X=5, Sterilized	YES	100caps/bag,100tubes/bag,1000sets/case
5X0060	60ml	pp cap, pp bottle	Transparency	X=0, No Sterile; when X=5, Sterilized	YES	50caps/bag,50tubes/bag,500sets/case
5X1060	60ml	pp cap, HDPE bottle	Natural color	X=0, No Sterile; when X=5, Sterilized	YES	50caps/bag,50tubes/bag,500sets/case
5X2060	60ml	pp cap, HDPE bottle	Dark brown	X=0, No Sterile; when X=5, Sterilized	YES	50caps/bag,50tubes/bag,500sets/case
5X0125	125ml	pp cap, pp bottle	Transparency	X=0, No Sterile; when X=5, Sterilized	YES	25caps/bag,25tubes/bag,250sets/case
5X1125	125ml	pp cap, HDPE bottle	Natural color	X=0, No Sterile; when X=5, Sterilized	YES	25caps/bag,25tubes/bag,250sets/case
5X2125	125ml	pp cap, HDPE bottle	Dark brown	X=0, No Sterile; when X=5, Sterilized	YES	25caps/bag,25tubes/bag,250sets/case
5X0250	250ml	pp cap, pp bottle	Transparency	X=0, No Sterile; when X=5, Sterilized	YES	20caps/bag,20tubes/bag,200sets/case
5X1250	250ml	pp cap, HDPE bottle	Natural color	X=0, No Sterile; when X=5, Sterilized	YES	20caps/bag,20tubes/bag,200sets/case
5X2250	250ml	pp cap, HDPE bottle	Dark brown	X=0, No Sterile; when X=5, Sterilized	YES	20caps/bag,20tubes/bag,200sets/case
5X0500	500ml	pp cap, pp bottle	Transparency	X=0, No Sterile; when X=5, Sterilized	YES	10caps/bag,10tubes/bag,100sets/case
5X1500	500ml	pp cap, HDPE bottle	Natural color	X=0, No Sterile; when X=5, Sterilized	YES	10caps/bag,10tubes/bag,100sets/case
5X2500	500ml	pp cap, HDPE bottle	Dark brown	X=0, No Sterile; when X=5, Sterilized	YES	10caps/bag,10tubes/bag,100sets/case
5X1001	1000ml	pp cap, pp bottle	Transparency	X=0, No Sterile; when X=5, Sterilized	YES	5caps/bag,5tubes/bag,100sets/case
5X1101	1000ml	pp cap, HDPE bottle	Natural color	X=0, No Sterile; when X=5, Sterilized	YES	5caps/bag,5tubes/bag,100sets/case
5X1201	1000ml	pp cap, HDPE bottle	Dark brown	X=0, No Sterile; when X=5, Sterilized	YES	5caps/bag,5tubes/bag,100sets/case

Media Bottles

Features

- Bottle:HighClafityPET /PETG;Cap:HDPE
- Available in 5ml 10ml 30ml 60ml 125ml 250ml 500ml 1000ml volumes for options
- Square design for easy handling, storage and transportation
- Sterile by E-Beam
- DNase/RNase, human DNA free
- Operating temperature: -80℃~-60℃
- Tight cap fittling system and unique T-leaking proof design

Item No.	Volume	Materia	Sterile	No enzyme	Packaging Specifications
590005	5ml	PETG	YES	YES	100pcs/bag,5bags/case
590010	10ml	PETG	YES	YES	100pcs/bag,5bags/case
590030	30ml	PETG	YES	YES	40pcs/bag,7bags/case
590060	60ml	PETG	YES	YES	40pcs/bag,5bags/case
590125	125ml	PETG	YES	YES	24pcs/bag,4bags/case
590250	250ml	PETG	YES	YES	30pcs/bag,2bags/case
590500	500ml	PETG	YES	YES	24pcs/bag,2bags/case
591000	1000ml	PETG	YES	YES	12pcs/bag,2bags/case

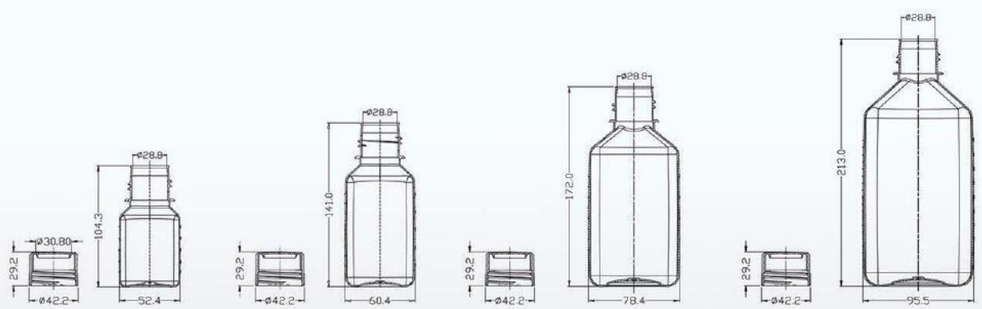

Dimensions=mm

Sample tubes

Features

- Medical grade PP material
- Available in 5ml, 6ml, 12ml, 20ml, 30ml volumes for options
- NDase/RNase free, No endotoxin, No heavy metal
- Test: -80Kpa negative pressure sealing 15mins
- Sterile :E-Beam 15KGY

Item No.	Volume	Sterile	Packaging Specifications
650121-1	6ml	NO	500caps/bag,500tubes/bag,3000pcs/case
650121-2	10ml	YES	250caps/bag,250tubes/bag,1500sets/case
650121-3	5ml	NO	500caps/bag,500tubes/bag,2000pcs/case
650120	10ml	YES	250caps/bag,250tubes/bag,1500sets/case
650020-1/650020	20ml	NO	4500caps/bags/case 1500tubes/bags/case
650030-1/650030	30ml	NO	3500caps/bags/case 1000tubes/bags/case

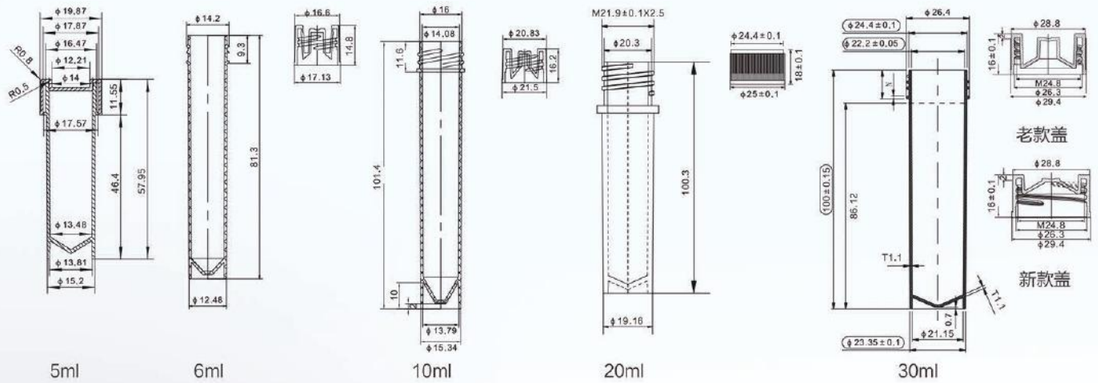

Dimensions=mm

Antigen test Tube

产品特点

- Medical grade material
- Cap color ok make OEM PANTON No.
- Tested to withstand −80Kpa negative pressure sealing
- Strong chemical resistance to acid and alkali alcohols

Item No.	Volume	Color	Style	Packaging Specifications
630001−1	——	purple	Antigen Test Cap, top clarity cap + large cap	upper cap4500pcs/bag lower cap9000pcs/bag, upper cap 2bags+ lower cap 1bags/case, 9000sets/case
630001	3ml	transparency	Antigen Test Tube	9000pcs/bag/case
630002−1	——	red	Single Antigen Test Tube Caps	1000pcs/bag, 8bags/case, 8000pcs/case
630002	3ml	transparency	Single Antigen Test Tube body	24000pcs/bag/case

Deep Well Plates

Dimensions=mm

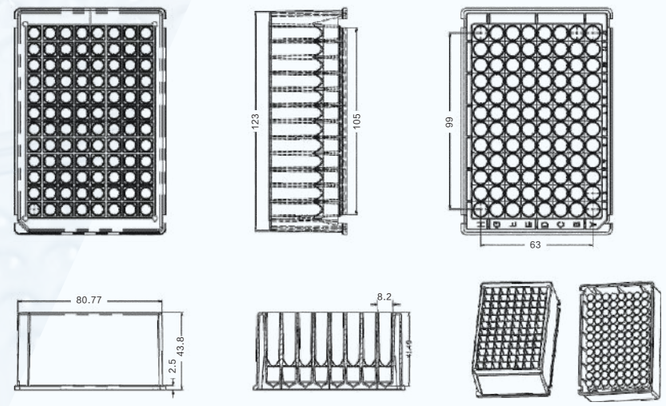

671001

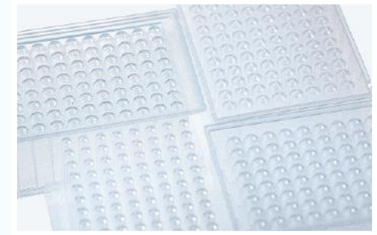

Features

- Medical grade pp material
- Provide a variety of options for U bottom and V bottom
- Can be sterilized by high temperature and high pressure, and can be matched with sealing film
- Compliant with SBS automation standards

Item No.	Volume	Des.	Style	Sterile	No enzyme	Packaging Specifications
671001	2.2ml	Deep Well Plate	V bottom	NO	YES	50pcs/case
671002	2.2ml	Deep Well plate	U bottom	NO	YES	50pcs/case
671003	2.2ml	Deep Well plate	I−shaped board	NO	YES	50pcs/case
672008	——	8−Strip Rod Comb	Strengthen Section A	NO	YES	2bags/box,4boxes/case
672018	——	8−Strip Rod Comb	Strengthen Section B	NO	YES	2bags/box,4boxes/case
672000	——	96−Strip Rod Comb	−	NO	YES	100pcs/case
673000	——	Sealing film	−	NO	YES	100pcs/case

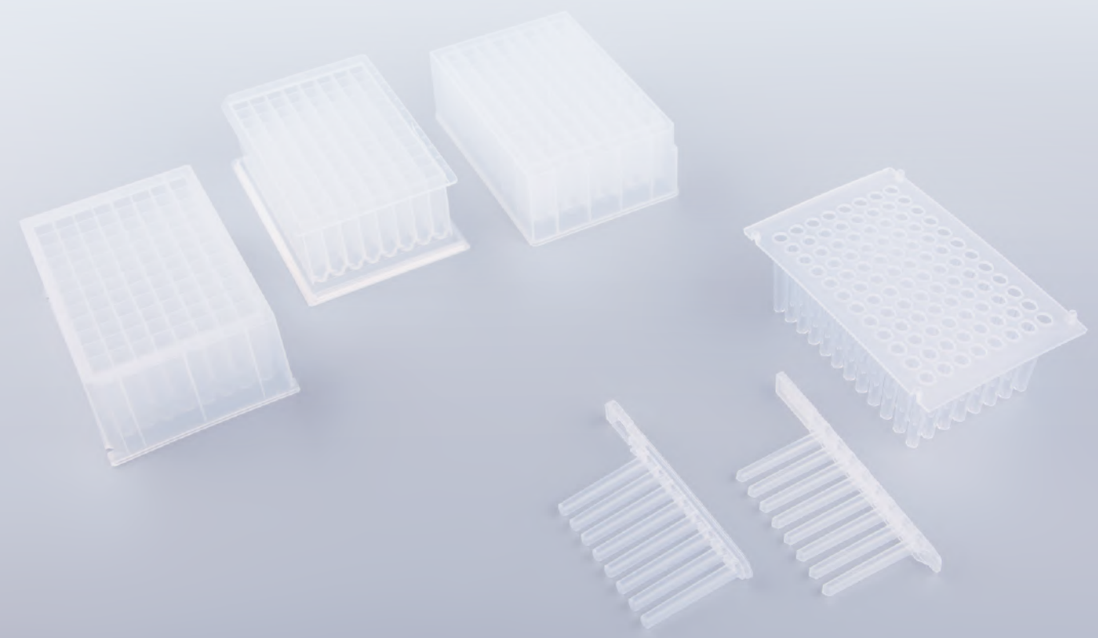

Hamilton Automatic Pipette tips

Features

- Medical grade PP material,
- Low adsorption ,black conductive pipette tips
- Uniform resistance and CV values
- E-Beam Sterile ,DNase/ Rnase,free , no pyrogen
- Hamilton Automated Tips for Hamilton series Workstations

Item No.	Volume	Color	Low Adsorption	Filter or No Filter	Sterile No enzyme	Packaging Specifications
H490302	300ul	Black	YES	NO	YES	96tips/rack ,24racks/inner box,96racks/case
H490303	300ul	Black	YES	YES	YES	96tips/rack ,24racks/inner box,96racks/case
H491002	1000ul	Black	YES	NO	YES	96tips/rack ,16racks/inner box,64racks/case
H491003	1000ul	Black	YES	YES	YES	96tips/rack ,16racks/inner box,64racks/case

Tecan Automatic Pipette Tips

Features

- Medical grade pp material
- Low adsorption ,black conductive pipette tips
- Uniform resistance and CV values
- Steriled by E-Beam , DNase /Rnase,free , no pyrogen
- Tecan automated tips for Tecan series workstations

Item No.	Volume	Color	Low Adsorption	Filter or No Filter	Steriled,Non-enzyme	Packaging Specifications
T490200	200μL	Transparency	YES	NO	YES	96tips/rack ,24racks/inner box,96racks/case
T490201	200μL	Transparency	YES	Have	YES	96tips/rack ,24racks/inner box,96racks/case
T490202	200μL	Black	YES	NO	YES	96tips/rack ,24racks/inner box,96racks/case
T490203	200μL	Black	YES	Have	YES	96tips/rack ,24racks/inner box,96racks/case
T491000	1000μL	Transparency	YES	No	YES	96tips/rack ,16racks/inner box,64racks/case
T491001	1000μL	Transparency	YES	Have	YES	96tips/rack ,16racks/inner box,64racks/case
T491002	1000μL	Black	YES	NO	YES	96tips/rack ,16racks/inner box,64racks/case
T491003	1000μL	Black	YES	Have	YES	96tips/rack ,16racks/inner box,64racks/case

1000μL

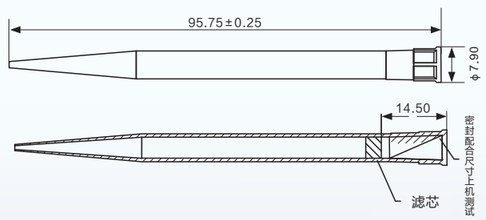

200μL

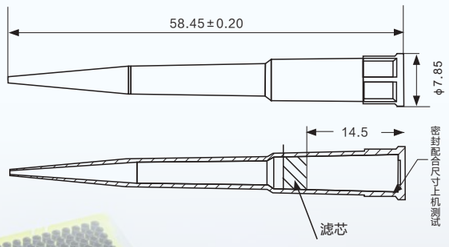

Dimensions=mm

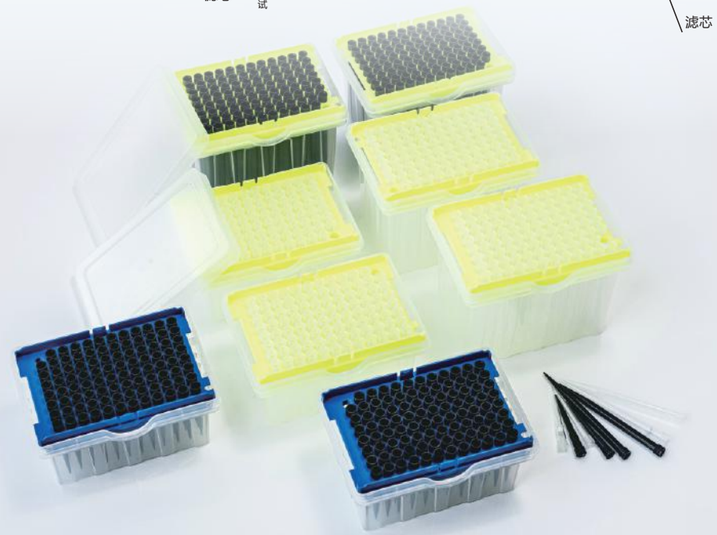

Bacterial Culture Bottle

Features

- Medical grade PC material
- Silicon Cap and plastic Screw Cap
- Perfect for M é rieux analyzers

Item No.	Size	Color	Packaging Specifications
580001	34.5*112mm	Silicone cap	100pcs/case
580002	34.5*112mm	Blue cap	100pcs/case
580003	34.5*112mm	Yellow cap	100pcs/case

Saliva Collectors

Features

- Safety: Painless, Non-Invasive, No Cross Infection
- Portable: Transport at room temperature, storage at room temperature for 24 months after sampling, DNA will not degrade
- Efficient: A large amount of DNA was obtained, High efficiency of extraction.
- Barcode: Each sample has a unique international standard barcode, which regulates sample management and protects the subject's privacy.

Item No.	Volume	Tube Graduate	Sterile	Non-enzyme	Packaging Specifications
652005	5ml	YES	NO	YES	100pcs/bag,1000pcs/case
652011	10ml	YES	NO	YES	1000sets/case
652505	5ml	YES	NO	YES	1000sets/case
652511	10ml	YES	NO	YES	Blister box independent packaging,400sets/case

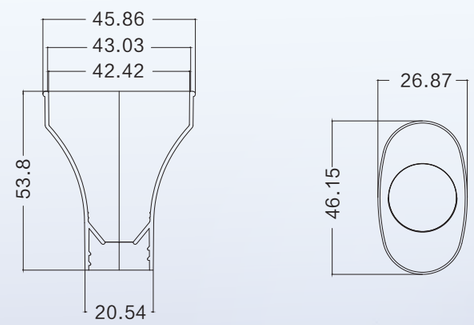

650006

Dimensions=mm

Disposable Virus Sample Tubes

Features

- Use a variety of antibiotics to effectively prevent bacterial and fungal contamination
- The addition of bovine serum albumin (BSA) as a protein stabilizer can protect virus samples and improve resolution
- The sampling tube is thickened and leak-proof design to ensure that the sample does not leak, in line with WHO regulations and biosafety regulations

Item No.	Reagent	Tube Volume	Single tube sampling	Sterile	Non- enzyme	Packaging Specifications
660121	Inactivated, 3ml	10ml	1	NO	YES	50pcs/bag,500pcs/case
660121-10	Inactivated, 6ml	10ml	10	NO	YES	50pcs/bag,500sets/case